# Chain

# Technical Catalogue

CHAINS • SPROCKETS • COUPLINGS • PULLEYS

GB

*Quality Guaranteed*

Quality Guaranteed

# Contents

Quality Guaranteed


| | |
|---|---|
| Imperial to Metric Conversion Tables | 3 |
| Chain Construction & Components | 4 |
| American Standard Simplex Roller Chain | 5 |
| American Standard Duplex Roller Chain | 6 |
| American Standard Triplex Roller Chain | 7 |
| American Standard Heavy Duty Roller Chain (H) | 8 |
| American Standard Super Heavy Duty Roller Chain (SH) | 9 |
| American Standard Double Pitch Conveyor Chain | 10 |
| American Standard Double Pitch Conveyor Chain Attachments | 11-12 |
| Double Pitch Conveyor Chain with Extended Pins | 13 |
| British Standard (DIN) Simplex Roller Chain | 14 |
| British Standard (DIN) Duplex Roller Chain | 15 |
| British Standard (DIN) Triplex Roller Chain | 16 |
| American & British Standard Chain Attachments | 17-20 |
| American & British Standard Chain with Extended Pins | 21 |
| American & British Standard Stainless Steel Roller Chain | 22 |
| Hollow Pin Chains American Standard | 23 |
| Hollow Pin Chains American Standard Double Pitch | 24 |
| Hollow Pin Chains British Standard | 25 |
| Motorcycle Chain Standard & Heavy Duty | 26 |
| Motorcycle O-Ring Chain Standard & Heavy Duty | 27 |
| Industrial O-Ring Chain | 28 |
| Agricultural Roller Chain | 29 |
| Agricultural Roller Chain Attachments | 30-31 |
| Pressed Steel Detachable Chain | 32 |
| Chain Breakers | 33 |
| American Standard Leaf Chain | 34 |
| American Standard AL Series Leaf Chain | 35 |
| American Standard BL Series Leaf Chain | 36-37 |
| European Standard Leaf Chains DIN | 38-39 |
| Trencher Chains | 40 |
| Steel Pintel Chains | 41 |
| Timber Mill Roller Chains | 42 |
| Malleable Cast Iron Chains | 43-44 |
| Offset Sidebar Welded Steel Chain | 45 |
| Straight Sidebar Welded Steel Chain | 46 |
| Extra Heavy Duty Welded Steel Chain | 47 |
| Straight Sidebar Welded Steel Chain | 48 |
| Conveyor Chain Attachments | 49 |
| Conveyor Chain Sprocket Pitch Diameters | 50 |
| Bushed Steel Conveyor Chain | 51 |
| Solid Pin Conveyor Chain | 52 |
| High Side Plate Conveyor Chain | 53 |
| Hollow Pin Conveyor Chain | 54 |
| Chain Drive Selection | 55-57 |
| Roller Chain Lubrication | 58 |
| New Hitachi SBR-Prime Roller Chain Now Available | 59 |
| Other Quality Products | 60 |


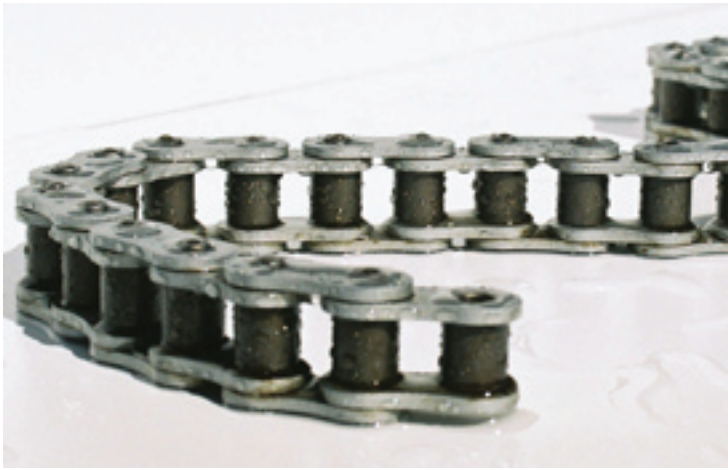

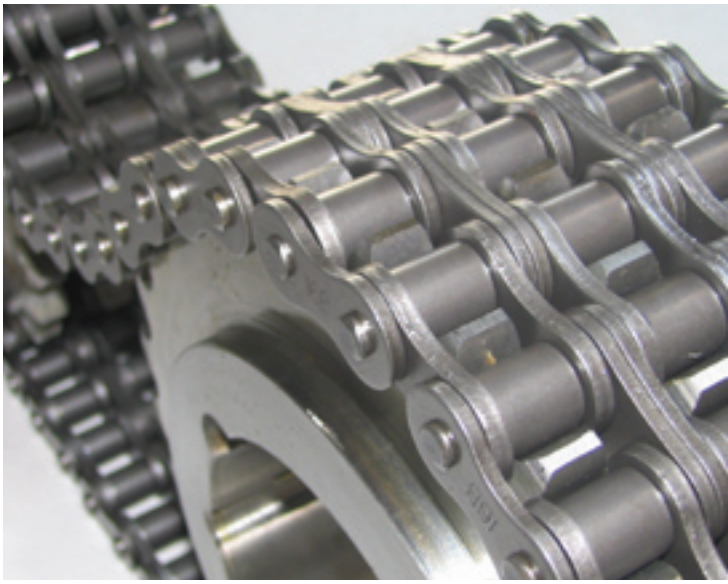

The GB range of Chains, Sprockets, Couplings and Pulleys has evolved from 20 years expertise in the importation and sale of the products locally in the Australia. The GB range is proudly imported from China from a group of individually selected manufactures producing a quality of product that exceeds local expectation and standards. China, like other nations have before them, is fast developing into a quality manufacture of products for the industrial power transmission industry. Amongst the many manufactures are a small group that continues to strive to better the finished product and reach their goal of equaling the quality and reputation of today's market leaders.

The best of these products will carry the GB brand and are backed by the local importers vast product experience and expertise. The GB product will be supported by detailed technical and promotional material and like the other leading brands will be warranted to be free from faulty workmanship and materials for a 12 month period. Products now carrying the GB brand are procured from factories using modern, state of the art machines and manufacturing processes. They have all been visited by GB Power and will continue to be on an ongoing basis to ensure their level of quality continues to grow over time. All have quality systems in place and all conform to the standards required by international markets. The **GB** brand name is your **Quality Guaranteed.**

Quality Guaranteed

# Imperial to Metric Conversion Tables

Quality Guaranteed

| Metric Size mm | Imperial Size inch |
|---|---|
| 0.794 | 1/32" |
| 1 | |
| 1.587 | 1/16" |
| 2 | |
| 2.381 | 3/32" |
| 3 | |
| 3.175 | 1/8" |
| 3.969 | 5/32" |
| 4 | |
| 4.763 | 3/16" |
| 5 | |
| 5.556 | 7/32" |
| 6 | |
| 6.35 | 1/4" |
| 7 | |
| 7.144 | 9/32" |
| 7.938 | 5/16" |
| 8 | |
| 8.731 | 11/32" |
| 9 | |
| 9.525 | 3/8" |
| 10 | |
| 10.319 | 13/32" |
| 11 | |
| 11.113 | 7/16" |
| 11.906 | 15/32" |
| 12 | |
| 12.7 | 1/2" |
| 13 | |
| 13.494 | 17/32" |
| 14 | |
| 14.288 | 9/16" |
| 15 | |
| 15.081 | 19/32" |
| 15.875 | 5/8" |
| 16 | |
| 16.669 | 21/32" |
| 17 | |
| 17.463 | 11/16" |
| 18 | |
| 18.256 | 23/32" |
| 19 | |
| 19.05 | 3/4" |
| 19.844 | 25/32" |
| 20 | |

| Metric Size mm | Imperial Size inch |
|---|---|
| 20.638 | 13/16" |
| 21 | |
| 21.431 | 27/32" |
| 22 | |
| 22.225 | 7/8" |
| 23 | |
| 23.019 | 29/32" |
| 23.813 | 15/16" |
| 24 | |
| 24.606 | 31/32" |
| 25 | |
| 25.4 | 1" |
| 26 | |
| 26.99 | 1-1/16" |
| 27 | |
| 28 | |
| 28.575 | 1-1/8" |
| 29 | |
| 30 | |
| 30.16 | 1-3/16" |
| 31 | |
| 31.75 | 1-1/4" |
| 32 | |
| 33 | |
| 33.34 | 1-5/16" |
| 34 | |
| 34.925 | 1-3/8" |
| 35 | |
| 36 | |
| 36.51 | 1-7/16" |
| 37 | |
| 38 | |
| 38.1 | 1-1/2" |
| 39 | |
| 39.69 | 1-9/16" |
| 40 | |
| 41 | |
| 41.275 | 1-5/8" |
| 42 | |
| 42.86 | 1-11/16" |
| 43 | |
| 44 | |
| 44.45 | 1-3/4" |
| 45 | |
| 46 | |

| Metric Size mm | Imperial Size inch |
|---|---|
| 46.04 | 1-13/16" |
| 47 | |
| 47.625 | 1-7/8" |
| 48 | |
| 49 | |
| 49.21 | 1-15/16" |
| 50 | |
| 50.8 | 2" |
| 53.975 | 2-1/8" |
| 55 | |
| 57.15 | 2-1/4" |
| 60 | |
| 60.325 | 2-3/8" |
| 63.5 | 2-1/2" |
| 65 | |
| 66.675 | 2-5/8" |
| 69.85 | 2-3/4" |
| 70 | |
| 73.025 | 2-7/8" |
| 75 | |
| 76.2 | 3" |
| 80 | |
| 82.55 | 3-1/4" |
| 85 | |
| 88.9 | 3-1/2" |
| 90 | |
| 95 | |
| 95.25 | 3-3/4" |
| 100 | |
| 101.6 | 4" |
| 105 | |
| 107.95 | 4-1/4" |
| 110 | |
| 114.3 | 4-1/2" |
| 115 | |
| 120 | |
| 120.65 | 4-3/4" |
| 125 | |
| 127 | 5" |
| 130 | |
| 133.35 | 5-1/4" |
| 135 | |
| 139.7 | 5-1/2" |
| 140 | |
| 145 | |

| Metric Size mm | Imperial Size inch |
|---|---|
| 146.05 | 5-3/4" |
| 150 | |
| 152.4 | 6" |
| 158.75 | 6-1/4" |
| 160 | |
| 165.1 | 6-1/2" |
| 170 | |
| 171.45 | 6-3/4" |
| 177.8 | 7" |
| 180 | |
| 190 | |
| 190.5 | 7-1/2" |
| 200 | |
| 203.2 | 8" |
| 210 | |
| 215.9 | 8-1/2" |
| 220 | |
| 228.6 | 9" |
| 230 | |
| 240 | |
| 241.3 | 9-1/2" |
| 250 | |
| 254 | 10" |
| 260 | |
| 270 | |
| 279.4 | 11" |
| 280 | |
| 290 | |
| 300 | |
| 304.8 | 12" |
| 330.2 | 13" |
| 355.6 | 14" |
| 381 | 15" |
| 406.4 | 16" |
| 431.8 | 17" |
| 457.2 | 18" |
| 482.6 | 19" |
| 508 | 20" |
| 533.4 | 21" |
| 558.8 | 22" |
| 584.2 | 23" |
| 609.6 | 24" |
| 635 | 25" |
| 660.4 | 26" |
| 685.8 | 27" |

# Chain Construction & Components

Quality Guaranteed

Roller chain consists of pins, bushings, rollers and link plates as illustrated below.

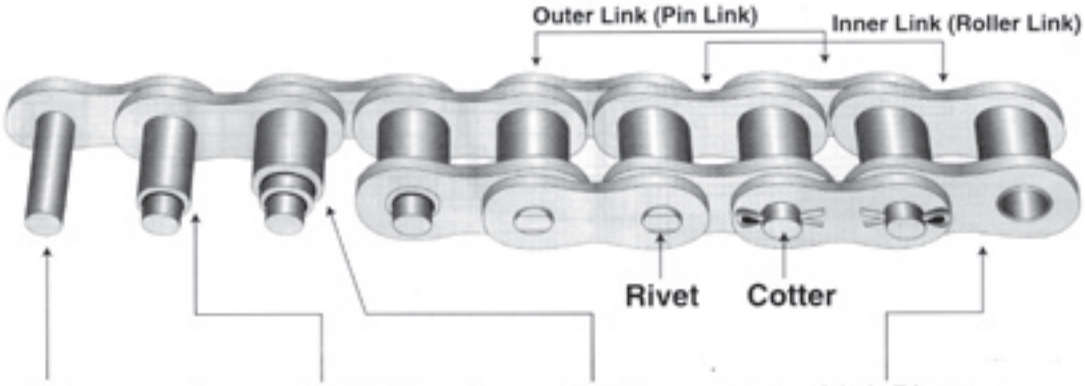


**Pin** requires to have a high wear resistance and shearing strength to support all the load acting on the chain.

**Bushing** receives massive forces from other components of the chains and requires wear resistance and fatigue strength.

**Roller** requires high shock strength, collapse strength and wear resistance to protect the chain from heavy shock of the sprocket and also in order to bend the chains smoothly when engaged with the sprocket.

**Link Plate** receives direct tension of the chain with occasional large shock on power transmission. Therefore, requires high tensile strength, shock resistance and fatigue strength.

**Connecting Link**
(Spring Clip type)

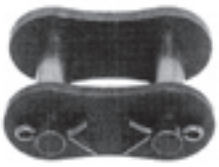

**Connecting Link**
(Cotter Pin type)

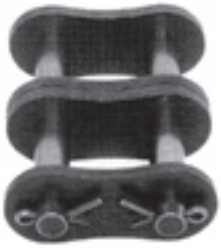

**Connecting Link**
(Duplex)

**Offset Link**

**Offset Link**
(Duplex)

**Two Pitch Offset Link**

**Connecting Link** allows easy installation or removal of a roller chain with an even number of pitches. Spring Clips or Cotter Pins are used to retain the connecting pins.

**Offset Link** are used to adjust the lengths of the chain with an odd number of pitches.(It is not recommended to use Offset Link. Whenever possible use the chain with an even number of pitches.)

**Two Pitch Offset Link** is a combination of an inner link and offset link, which is stronger than One Pitch Offset Link.

Quality Guaranteed

# American Standard Simplex Roller Chain

Quality Guaranteed

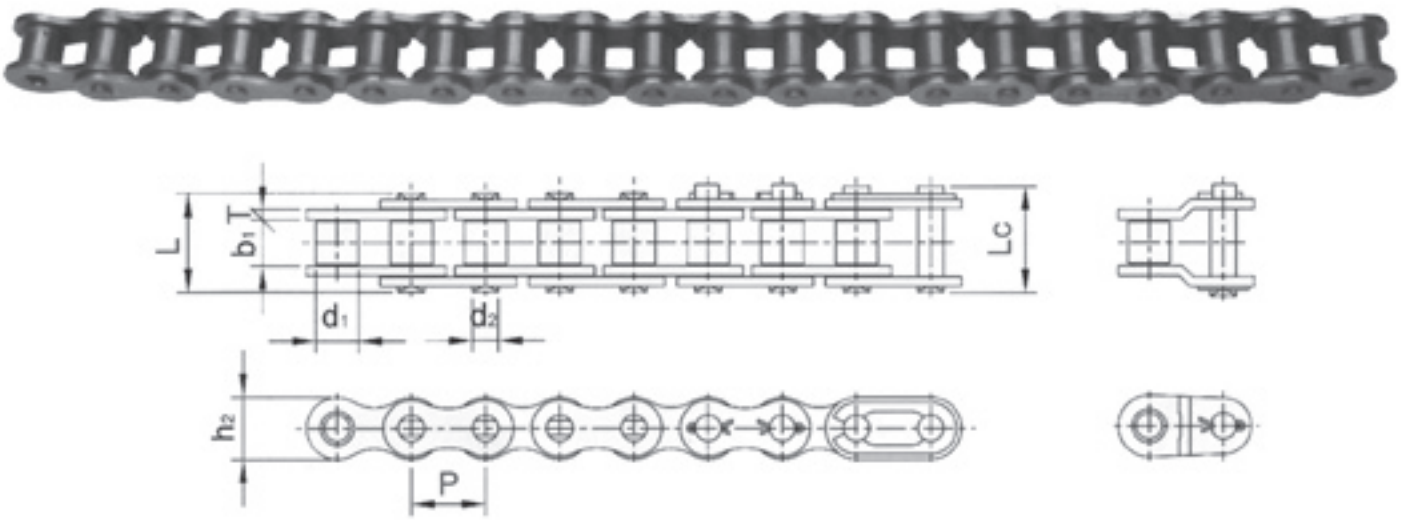


| ANSI Chain No. | Pitch | Roller diameter | Width between innter plates | Pin diameter | Pin Length | | Inner plate depth | Plate thickness | Ultimate tensile strength | Average tensile strength | Weight per meter |
|---|---|---|---|---|---|---|---|---|---|---|---|
| | P | $d_1$ max | $b_1$ min | $d_2$ max | L max | Lc max | $h_2$ max | T | Q(ISO/DIN) min | $Q_0$ | q = |
| | mm | mm | mm | mm | mm | mm | mm | mm | kN | kN | kg/m |
| *25 | 6.35 | 3.30 | 3.10 | 2.31 | 8.00 | 9.90 | 6.02 | 0.80 | 3.50 | 4.40 | 0.14 |
| *35 | 9.53 | 5.08 | 4.68 | 3.58 | 12.40 | 14.40 | 8.70 | 1.30 | 7.90 | 10.40 | 0.33 |
| 41 | 12.70 | 7.77 | 6.25 | 3.58 | 13.75 | 16.00 | 9.91 | 1.25 | 6.80 | 11.80 | 0.41 |
| 40 | 12.70 | 7.95 | 7.85 | 3.96 | 16.60 | 19.10 | 12.07 | 1.50 | 14.10 | 17.80 | 0.62 |
| 410 | 12.70 | 7.75 | 3.40 | 3.64 | 9.3 | 10.7 | 9.5 | 1.0 | 5.9 | 9.81 | 0.28 |
| 415 | 12.70 | 7.77 | 4.76 | 3.60 | 11.0 | 12.40 | 9.70 | 1.00 | 6.86 | 7.6 | 0.32 |
| 415H | 12.70 | 7.77 | 4.76 | 3.96 | 13.1 | 14.50 | 12.00 | 1.50 | 14.40 | 16.1 | 0.55 |
| 50 | 15.88 | 10.16 | 9.40 | 5.08 | 20.70 | 23.30 | 15.09 | 2.06 | 22.20 | 28.00 | 1.02 |
| 60 | 19.05 | 11.91 | 12.57 | 5.94 | 25.90 | 28.60 | 18.08 | 2.44 | 31.80 | 39.00 | 1.50 |
| 80 | 25.40 | 15.88 | 15.75 | 7.92 | 32.70 | 38.00 | 24.13 | 3.26 | 56.70 | 71.50 | 2.60 |
| 100 | 31.75 | 19.05 | 18.90 | 9.53 | 41.10 | 44.90 | 30.18 | 4.00 | 88.50 | 102.00 | 3.91 |
| 120 | 38.10 | 22.23 | 25.22 | 11.10 | 50.80 | 56.10 | 36.20 | 4.80 | 127.00 | 156.90 | 5.62 |
| 140 | 44.45 | 25.40 | 25.22 | 12.70 | 54.90 | 60.80 | 42.24 | 5.65 | 172.40 | 210.80 | 7.50 |
| 160 | 50.80 | 28.58 | 31.55 | 14.27 | 65.50 | 72.60 | 48.26 | 6.45 | 226.80 | 269.70 | 10.10 |
| 180 | 57.15 | 35.71 | 35.48 | 17.46 | 72.80 | 83.00 | 54.31 | 7.25 | 280.20 | 327.80 | 13.45 |
| 200 | 63.50 | 39.68 | 37.85 | 19.85 | 80.30 | 90.50 | 60.33 | 8.00 | 353.80 | 410.00 | 16.15 |
| 240 | 76.20 | 47.63 | 47.35 | 23.81 | 95.50 | 106.00 | 72.39 | 9.50 | 510.30 | 585.40 | 23.20 |

* Bush chain: $d_1$ indicate the external diameter of the bushing.

Quality Guaranteed

# American Standard Duplex Roller Chain

Quality Guaranteed

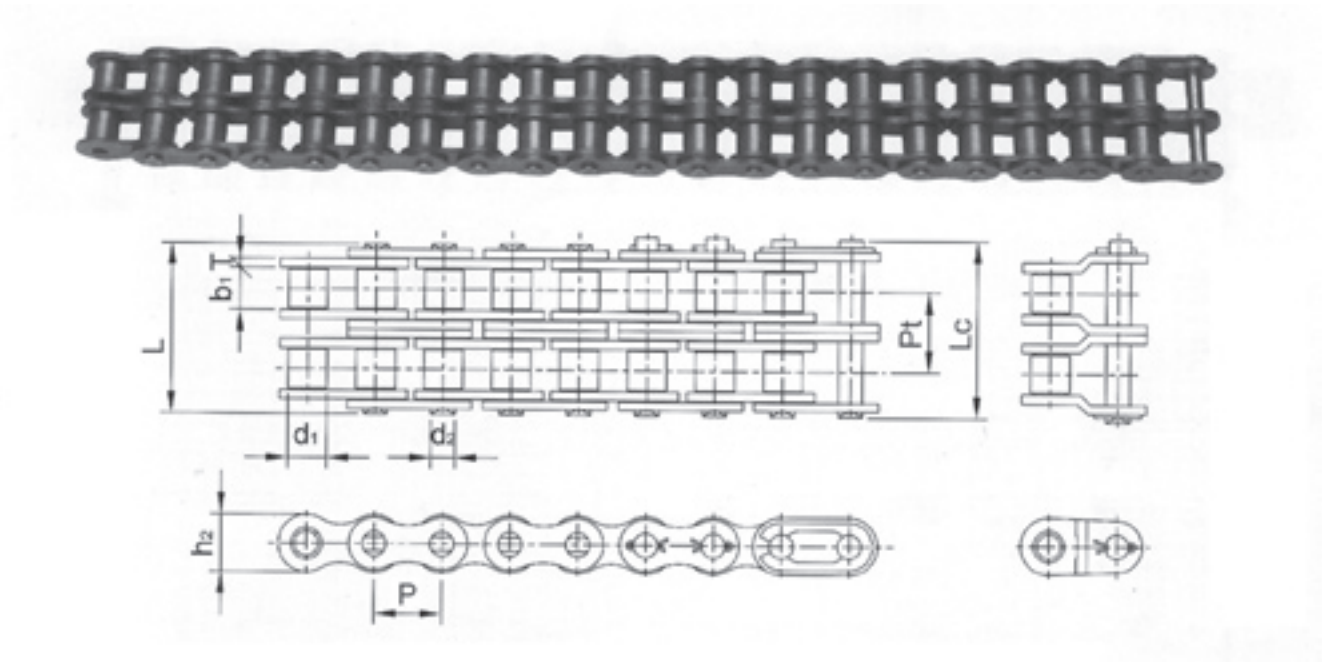


| ANSI Chain No. | Pitch | Roller diameter | Width between inter plates | Pin diameter | Pin Length | | Inner plate depth | Transverse pitch | Plate thickness | Ultimate tensile strength | Average tensile strength | Weight per meter |
|---|---|---|---|---|---|---|---|---|---|---|---|---|
| | P | $d_1$ max | $b_1$ min | $d_2$ max | L max | Lc max | $h_2$ max | Pt max | T | Q(ISO/DIN) min | $Q_0$ | q = |
| | mm | mm | mm | mm | mm | mm | mm | mm | mm | kN | kN | kg/m |
| *25-2 | 6.35 | 3.30 | 3.10 | 2.31 | 14.50 | 16.50 | 6.02 | 6.40 | 0.80 | 7.00 | 8.80 | 0.28 |
| *35-2 | 9.53 | 5.08 | 4.68 | 3.58 | 22.50 | 24.50 | 8.70 | 10.13 | 1.30 | 15.80 | 20.80 | 0.63 |
| 40-2 | 12.70 | 7.95 | 7.85 | 3.96 | 31.00 | 33.50 | 12.07 | 14.38 | 1.50 | 28.20 | 35.60 | 1.12 |
| 50-2 | 15.88 | 10.16 | 9.40 | 5.08 | 38.90 | 41.30 | 15.09 | 18.11 | 2.06 | 44.40 | 56.00 | 2.00 |
| 60-2 | 19.05 | 11.91 | 12.57 | 5.94 | 48.80 | 51.50 | 18.08 | 22.78 | 2.44 | 63.20 | 82.40 | 2.92 |
| 80-2 | 25.40 | 15.88 | 15.75 | 7.92 | 62.70 | 67.10 | 24.13 | 29.29 | 3.26 | 113.40 | 143.00 | 5.15 |
| 100-2 | 31.75 | 19.05 | 18.90 | 9.53 | 76.40 | 83.10 | 30.18 | 35.76 | 4.00 | 177.00 | 204.00 | 7.80 |
| 120-2 | 38.10 | 22.23 | 25.22 | 11.10 | 96.30 | 101.60 | 36.20 | 45.44 | 4.80 | 254.00 | 313.80 | 11.70 |
| 140-2 | 44.45 | 25.40 | 25.22 | 12.70 | 103.60 | 109.40 | 42.24 | 48.87 | 5.65 | 344.80 | 421.70 | 15.14 |
| 160-2 | 50.80 | 28.58 | 31.55 | 14.27 | 123.30 | 130.20 | 48.26 | 58.55 | 6.45 | 453.60 | 539.40 | 20.14 |
| 180-2 | 57.15 | 35.71 | 35.48 | 17.46 | 138.60 | 148.50 | 54.31 | 65.84 | 7.25 | 560.50 | 655.70 | 29.22 |
| 200-2 | 63.50 | 39.68 | 37.85 | 19.85 | 151.90 | 161.50 | 60.33 | 71.55 | 8.00 | 707.60 | 820.00 | 32.24 |
| 240-2 | 79.20 | 47.63 | 47.35 | 23.81 | 183.40 | 193.40 | 72.39 | 87.83 | 9.50 | 1020.60 | 1170.80 | 45.23 |

* Bush chain: $d_1$ indicate the external diameter of the bushing.

Quality Guaranteed

# American Standard Triplex Roller Chain

Quality Guaranteed

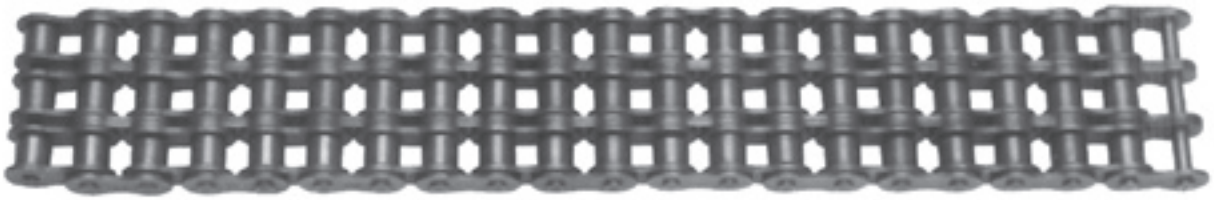

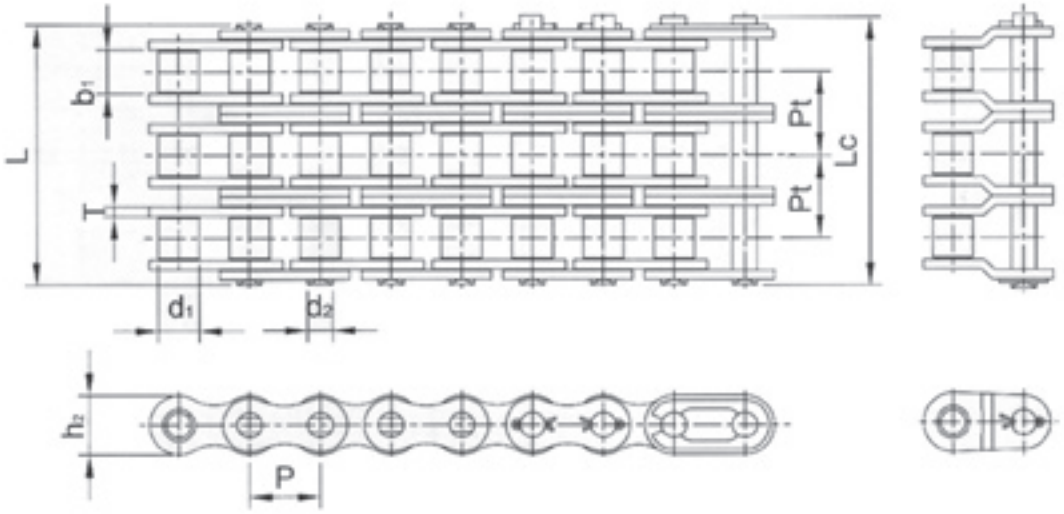


| ANSI Chain No. | Pitch | Roller diameter | Width between inter plates | Pin diameter | Pin Length | | Inner plate depth | Transverse pitch | Plate thickness | Ultimate tensile strength | Average tensile strength | Weight per meter |
|---|---|---|---|---|---|---|---|---|---|---|---|---|
| | P | $d_1$ max | $b_1$ min | $d_2$ max | L max | Lc max | $h_2$ | $h_2$ max | T | Q(ISO/DIN) min | $Q_0$ | q = |
| | mm | mm | mm | mm | mm | mm | mm | mm | mm | kN | kN | kg/m |
| *35-3 | 9.52 | 5.08 | 4.68 | 3.58 | 32.70 | 34.70 | 8.70 | 10.13 | 1.30 | 23.70 | 30.00 | 1.05 |
| 40-3 | 12.70 | 7.95 | 7.85 | 3.96 | 45.40 | 48.00 | 12.07 | 14.38 | 1.50 | 42.30 | 51.20 | 1.90 |
| 50-3 | 15.88 | 10.16 | 9.40 | 5.08 | 57.00 | 59.80 | 15.09 | 18.11 | 2.06 | 66.60 | 82.00 | 3.09 |
| 60-3 | 19.05 | 11.91 | 12.57 | 5.94 | 71.50 | 75.60 | 18.08 | 22.78 | 2.44 | 95.40 | 115.00 | 4.54 |
| 80-3 | 25.40 | 15.88 | 15.75 | 7.92 | 91.70 | 96.80 | 24.13 | 29.29 | 3.26 | 170.10 | 208.00 | 7.89 |
| 100-3 | 31.75 | 19.05 | 18.90 | 9.53 | 112.20 | 117.20 | 30.18 | 35.76 | 4.00 | 265.50 | 310.00 | 11.77 |
| 120-3 | 38.10 | 22.23 | 25.22 | 11.10 | 141.70 | 148.30 | 36.20 | 45.44 | 4.80 | 381.00 | 470.70 | 17.53 |
| 140-3 | 44.45 | 25.40 | 25.22 | 12.70 | 152.20 | 158.30 | 42.24 | 48.87 | 5.65 | 517.20 | 632.50 | 22.20 |
| 160-3 | 50.80 | 28.58 | 31.55 | 14.27 | 181.80 | 188.60 | 48.26 | 58.55 | 6.45 | 680.40 | 809.00 | 30.02 |
| 180-3 | 57.15 | 35.71 | 35.48 | 17.46 | 204.40 | 214.50 | 54.31 | 65.84 | 7.25 | 840.70 | 983.60 | 38.22 |
| 200-3 | 63.50 | 39.68 | 37.85 | 19.85 | 223.50 | 232.90 | 60.33 | 71.55 | 8.00 | 1061.40 | 1230.00 | 49.03 |
| 240-3 | 76.20 | 47.63 | 47.35 | 23.81 | 271.30 | 281.80 | 72.39 | 87.83 | 9.50 | 1530.90 | 1756.20 | 71.60 |

* Bush chain: $d_1$ indicate the external diameter of the bushing.

Quality Guaranteed

# American Standard Heavy Duty Roller Chain (H)

Quality Guaranteed

**H Series roller chains differ from standard roller chains in the extra thickness of link plates. Thicker plates provide greater shock load resistance and increased fatigue strength.**

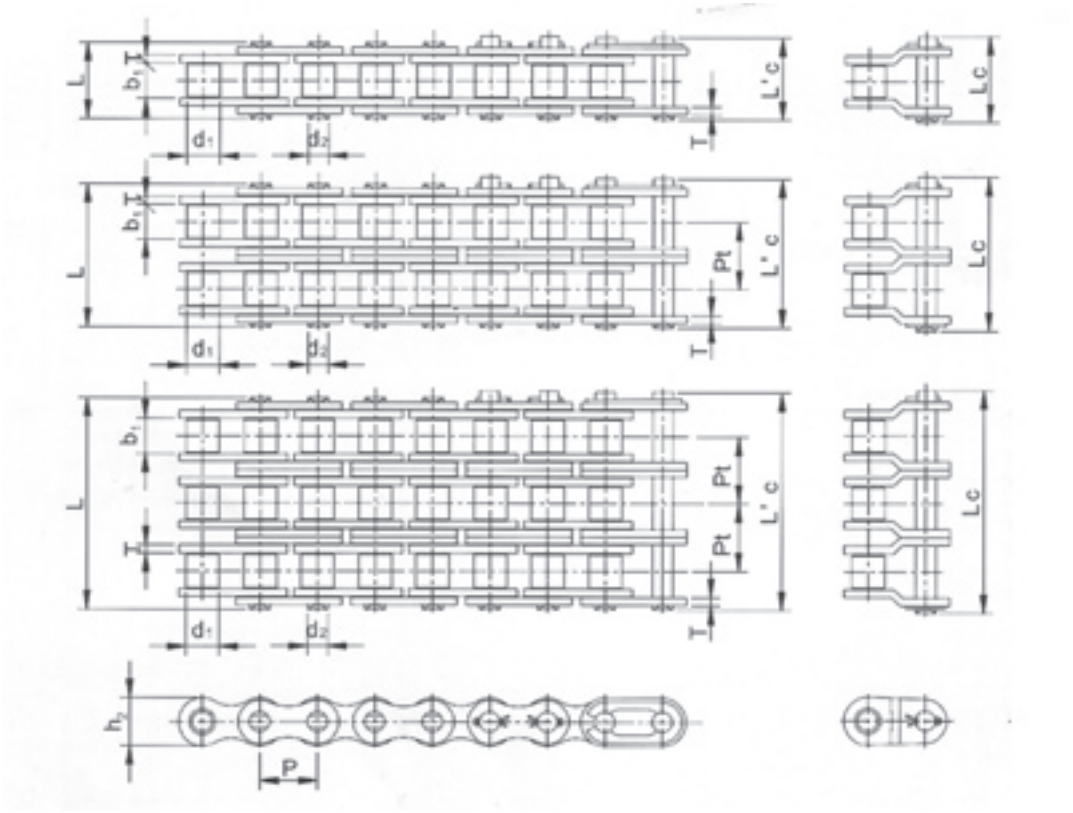


| ANSI Chain No. | Pitch | Roller diameter | Width between inter plates | Pin diameter | Pin Length | | Inner plate depth | Transverse pitch | Plate thickness | Ultimate tensile strength | Average tensile strength | Weight per meter |
|---|---|---|---|---|---|---|---|---|---|---|---|---|
| | P | $d_1$ max | $b_1$ min | $d_2$ max | L max | Lc max | $h_2$ | pt | T | Q(ISO/DIN) min | $Q_0$ | q = |
| | mm | mm | mm | mm | mm | mm | mm | mm | mm | kN | kN | kg/m |
| 40H | 12.70 | 7.95 | 7.85 | 3.96 | 18.20 | 19.70 | 12.00 | - | 2.06 | 14.10 | 20.40 | 0.82 |
| 50H | 15.88 | 10.16 | 9.40 | 5.08 | 22.10 | 24.90 | 15.09 | - | 2.44 | 22.20 | 29.80 | 1.25 |
| 60H | 19.05 | 11.91 | 12.57 | 5.94 | 29.90 | 34.50 | 18.08 | - | 3.26 | 31.80 | 41.00 | 1.87 |
| 80H | 25.40 | 15.88 | 15.75 | 7.92 | 36.60 | 42.00 | 24.13 | - | 4.00 | 56.70 | 72.10 | 3.10 |
| 100H | 31.75 | 19.05 | 18.90 | 9.53 | 44.10 | 50.20 | 30.18 | - | 4.80 | 88.50 | 106.20 | 4.38 |
| 120H | 38.10 | 22.23 | 25.22 | 11.10 | 53.80 | 60.40 | 36.20 | - | 5.65 | 127.00 | 156.70 | 6.60 |
| 60H-2 | 19.05 | 11.91 | 12.57 | 5.94 | 56.00 | 60.60 | 18.08 | 26.11 | 3.26 | 63.60 | 85.00 | 3.71 |
| 80H-2 | 25.40 | 15.88 | 15.75 | 7.92 | 69.20 | 74.60 | 24.13 | 32.59 | 4.00 | 113.40 | 144.20 | 6.15 |
| 100H-2 | 31.75 | 19.05 | 18.90 | 9.53 | 83.20 | 89.10 | 30.18 | 39.09 | 4.80 | 177.00 | 212.40 | 8.67 |
| 120H-2 | 38.10 | 22.23 | 25.22 | 11.10 | 102.7 | 109.30 | 36.20 | 48.87 | 5.65 | 254.00 | 310.50 | 13.13 |
| 60H-3 | 19.05 | 11.91 | 12.57 | 5.94 | 82.10 | 86.70 | 18.08 | 26.11 | 3.26 | 95.40 | 120.00 | 5.54 |
| 80H-3 | 25.40 | 15.88 | 15.75 | 7.92 | 101.8 | 107.20 | 24.13 | 32.59 | 4.00 | 170.10 | 210.20 | 9.42 |
| 100H-3 | 31.75 | 19.05 | 18.90 | 9.53 | 122.30 | 128.40 | 30.18 | 39.09 | 4.80 | 265.50 | 316.80 | 12.96 |
| 120H-3 | 38.10 | 22.23 | 25.22 | 11.10 | 151.50 | 158.10 | 36.20 | 48.87 | 5.65 | 381.00 | 458.20 | 19.64 |

Quality Guaranteed

# American Standard
# Super Heavy Duty Roller Chain (SH)

Quality Guaranteed

**SH series roller chains have a greater ultimate tensile strength (up to 25% -35%) over ANSI standard roller chains by using thicker side plates and through hardened pins. SH chains also provide a greater shock load resistance and are suited to slower speed high torque applications. The dimensions of the chain are identical to ANSI heavy series standard roller chains.**

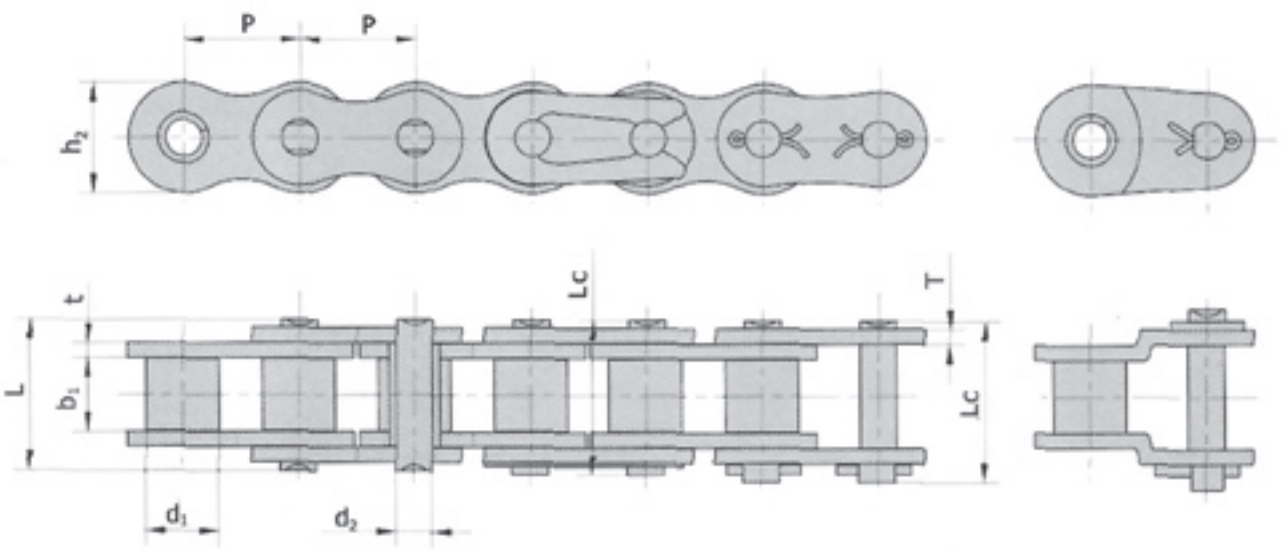


| Chain No. | Pitch | Roller diameter | Width between inter plates | Pin diameter | Pin Length | | Inner plate depth | Plate thickness | Ultimate tensile strength | Average tensile strength | Weight per meter |
|---|---|---|---|---|---|---|---|---|---|---|---|
| | P | $d_1$ max | $b_1$ min | $d_2$ max | L max | Lc max | $h_2$ | t/T max | Q min | $Q_0$ | q |
| | mm | mm | mm | mm | mm | mm | mm | mm | kN | kN | kg/m |
| 40SH | 12.70 | 7.95 | 7.85 | 3.96 | 18.8 | 19.9 | 12.00 | 2.03 | 22.4 | 24.8 | 0.82 |
| 50SH | 15.88 | 10.16 | 9.40 | 5.08 | 22.1 | 23.4 | 15.09 | 2.42 | 30.4 | 36.2 | 1.25 |
| 60SH | 19.05 | 11.91 | 12.57 | 5.94 | 29.2 | 31.6 | 18.00 | 3.25 | 44.1 | 50.4 | 1.87 |
| 80SH | 25.40 | 15.88 | 15.75 | 7.92 | 36.2 | 37.7 | 24.00 | 4.00 | 88.2 | 93.0 | 3.10 |
| 100SH | 31.75 | 19.05 | 18.90 | 9.53 | 43.6 | 46.9 | 30.00 | 4.80 | 116.6 | 129.1 | 4.52 |
| 120SH | 38.10 | 22.23 | 25.22 | 11.10 | 53.5 | 57.5 | 35.70 | 5.60 | 158.2 | 175.3 | 6.60 |
| 140SH | 44.45 | 25.40 | 25.22 | 12.70 | 57.6 | 62.2 | 41.00 | 6.40 | 206.0 | 266.5 | 8.30 |
| 160SH | 50.80 | 28.58 | 31.55 | 14.27 | 68.2 | 73.0 | 47.80 | 7.20 | 274.0 | 293.0 | 10.30 |
| 200SH | 63.50 | 39.68 | 37.85 | 19.85 | 86.6 | 93.5 | 60.00 | 9.50 | 506.1 | 562.30 | 19.16 |

Quality Guaranteed

# American Standard Double Pitch Conveyor Roller Chain

Quality Guaranteed

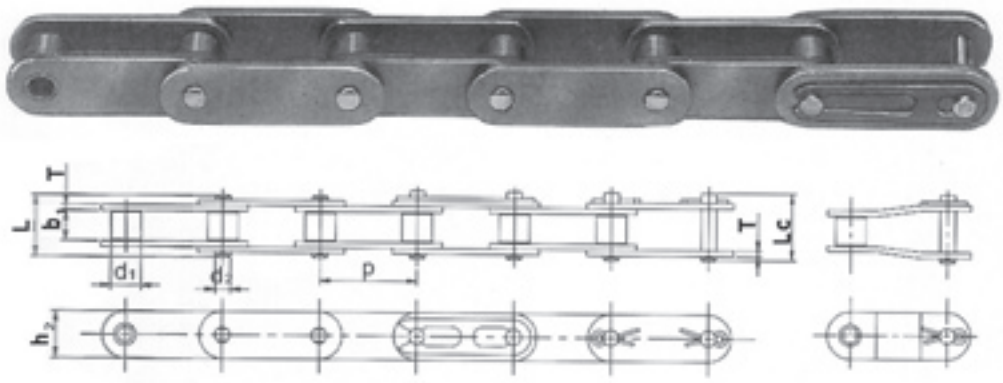


Small Roller Type

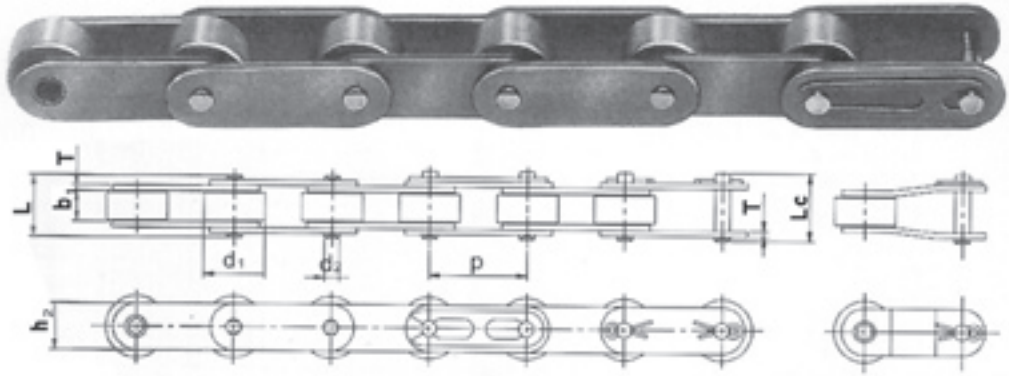


Large Roller Type

| Chain No. | Pitch | Roller diameter | Width between inter plates | Pin diameter | Pin Length | | Inner plate depth | Plate thickness | Ultimate tensile strength | Average tensile strength | Weight per meter |
|---|---|---|---|---|---|---|---|---|---|---|---|
| | P | $d_1$ max | $b_1$ min | d2 max | L max | Lc max | $h_2$ max | T | Q(ISO/DIN) min | $Q_0$ | q = |
| | mm | mm | mm | mm | mm | mm | mm | mm | kN | kN | kg/m |
| C2040<br>C2042 | 25.40 | 7.95<br>15.88 | 7.85 | 3.96 | 17.80 | 21.70 | 12.07 | 1.50 | 14.10 | 17.80 | 0.50<br>0.84 |
| C2050<br>C2052 | 31.75 | 10.16<br>19.05 | 9.40 | 5.08 | 21.80 | 25.90 | 15.09 | 2.06 | 22.20 | 28.00 | 0.73<br>1.27 |
| C2060H<br>C2062H | 38.10 | 11.91<br>22.23 | 12.57 | 5.94 | 29.90 | 34.50 | 18.08 | 3.26 | 31.80 | 39.00 | 1.44<br>2.07 |
| C2080H<br>C2082H | 50.80 | 15.88<br>28.58 | 15.75 | 7.92 | 36.60 | 42.00 | 24.13 | 4.00 | 56.70 | 71.50 | 2.54<br>3.58 |
| C2100H<br>C2102H | 63.50 | 19.05<br>39.67 | 18.90 | 9.53 | 44.10 | 50.20 | 30.18 | 4.80 | 88.50 | 102.00 | 3.56<br>5.38 |
| C2120H<br>C2122H | 76.20 | 22.23<br>44.45 | 25.22 | 11.10 | 53.50 | 57.50 | 35.70 | 5.65 | 127.00 | 156.90 | 5.26<br>8.26 |
| C2160H<br>C2162H | 101.60 | 28.58<br>57.15 | 31.75 | 14.27 | 68.20 | 73.00 | 47.80 | 7.25 | 226.80 | 269.70 | 9.06<br>12.77 |

Quality Guaranteed

# American Standard Double Pitch Conveyor Chain Attachments

Quality Guaranteed

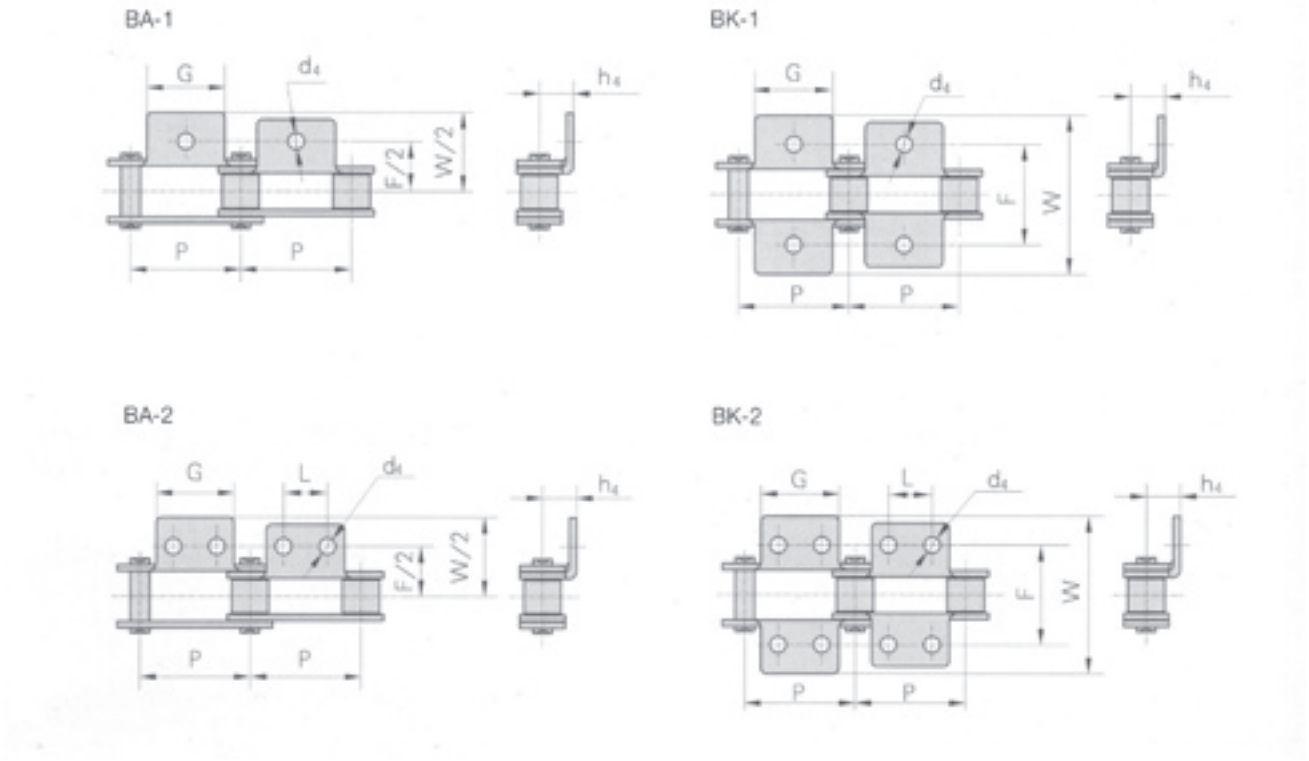


| ANSI Chain No. | P | G | L | F | W | $h_4$ | $d_4$ |
|---|---|---|---|---|---|---|---|
| C2040<br>C2042 | 25.4 | 19.1 | 9.5 | 25.4 | 39.6 | 9.1 | 3.4 |
| C2050<br>C2052 | 31.75 | 23.8 | 11.9 | 31.8 | 49.0 | 11.1 | 5.5 |
| C2060H<br>C2062H | 38.1 | 28.6 | 14.3 | 42.9 | 67.8 | 14.7 | 5.5 |
| C2080H<br>C2082H | 50.8 | 38.1 | 19.1 | 55.6 | 87.8 | 19.1 | 6.8 |
| C2100H<br>C2102H | 63.5 | 47.6 | 23.8 | 66.6 | 107.5 | 23.4 | 9.2 |
| C2120H<br>C2122H | 76.2 | 57.2 | 28.6 | 79.3 | 121.4 | 27.8 | 11.0 |
| C2160H<br>C2162H | 101.6 | 76.2 | 38.1 | 104.7 | 151.6 | 36.5 | 13.1 |

Quality Guaranteed

# American Standard Double Pitch Conveyor Chain Attachments

Quality Guaranteed

SA–1

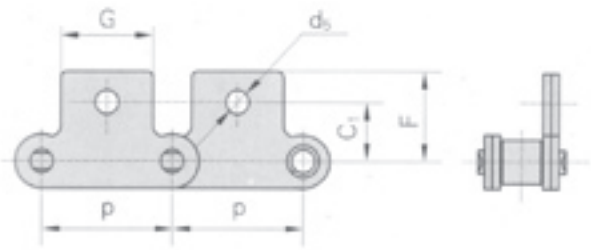


SK–1

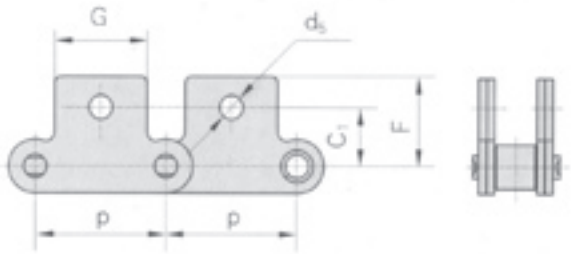


SA–2

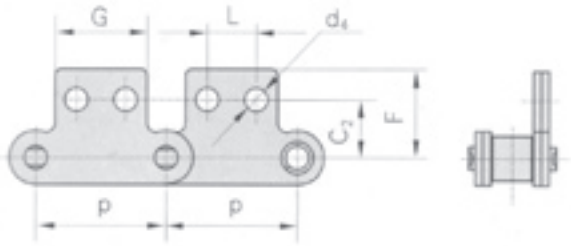


SK–2

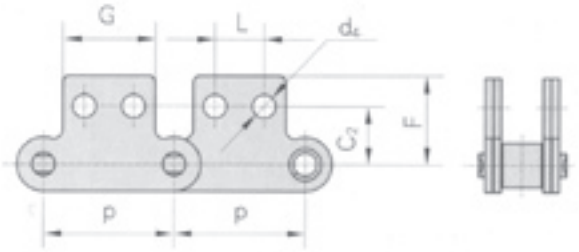


| ANSI Chain No. | P | G | L | $C_1$ | $C_2$ | F | $d_4$ | $d_5$ |
|---|---|---|---|---|---|---|---|---|
| C2040<br>C2042 | 25.4 | 19.1 | 9.5 | 11.1 | 13.5 | 20.5 | 3.4 | 5.5 |
| C2050<br>C2052 | 31.8 | 23.8 | 11.9 | 14.3 | 15.9 | 25.0 | 5.5 | 6.6 |
| C2060H<br>C2062H | 38.1 | 28.6 | 14.3 | 17.5 | 19.1 | 32.9 | 5.5 | 9.2 |
| C2080H<br>C2082H | 50.8 | 38.1 | 19.1 | 22.2 | 25.4 | 43.5 | 6.6 | 11.0 |
| C2100H<br>C2102H | 63.5 | 47.6 | 23.8 | 28.6 | 31.8 | 50.4 | 8.4 | 13.0 |

# Double Pitch Conveyor Chain with Extended Pins

Quality Guaranteed

D-1

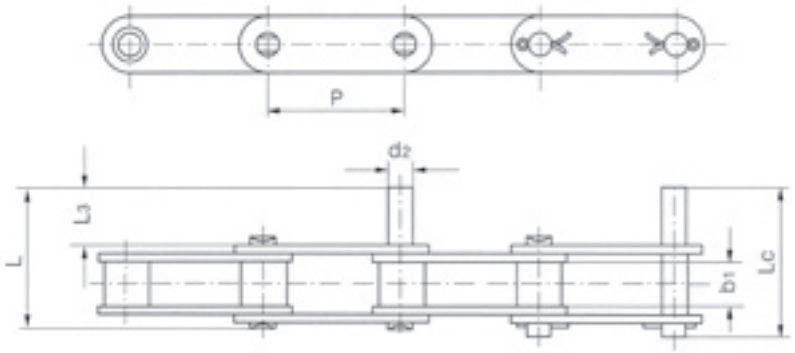


D-3

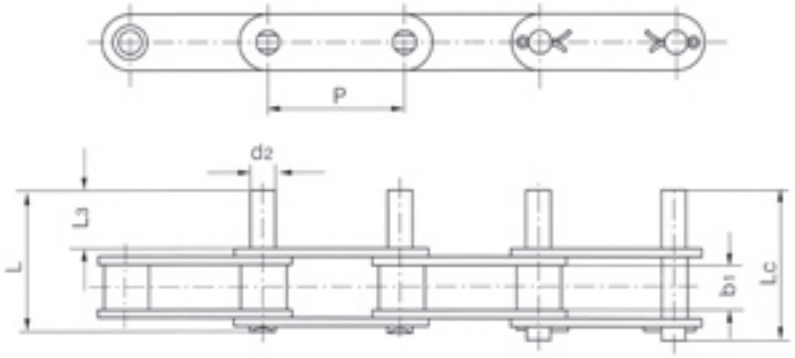


| Chain No. | P | b1 | d2 | L3 | L | Lc |
|---|---|---|---|---|---|---|
| | mm | mm | mm | mm | mm | mm |
| C2040<br>C2042 | 25.40 | 7.85 | 3.96 | 9.5 | 25.1 | 26.2 |
| C2050<br>C2052 | 31.75 | 9.40 | 5.08 | 11.9 | 31.3 | 33.1 |
| C2060<br>C2062 | 38.10 | 12.57 | 5.94 | 14.3 | 38.6 | 40.6 |
| C2060H<br>C2062H | 38.10 | 12.57 | 5.94 | 14.3 | 42.0 | 43.8 |
| C2080<br>C2082 | 50.80 | 15.75 | 7.92 | 19.1 | 50.3 | 53.3 |
| C2080H<br>C2082H | 50.80 | 15.75 | 7.92 | 19.1 | 53.5 | 55.0 |
| C2100<br>C2102 | 63.50 | 18.90 | 9.53 | 23.8 | 61.8 | 66.1 |
| C2100H<br>C2102H | 63.50 | 18.90 | 9.53 | 23.8 | 65.0 | 68.3 |
| C2120H<br>C2122H | 76.20 | 25.22 | 11.10 | 28.6 | 79.6 | 83.6 |
| C2160H<br>C2162H | 101.60 | 31.55 | 14.27 | 38.1 | 103.0 | 107.8 |

Quality Guaranteed

# British Standard (DIN) Simplex Roller Chain

Quality Guaranteed

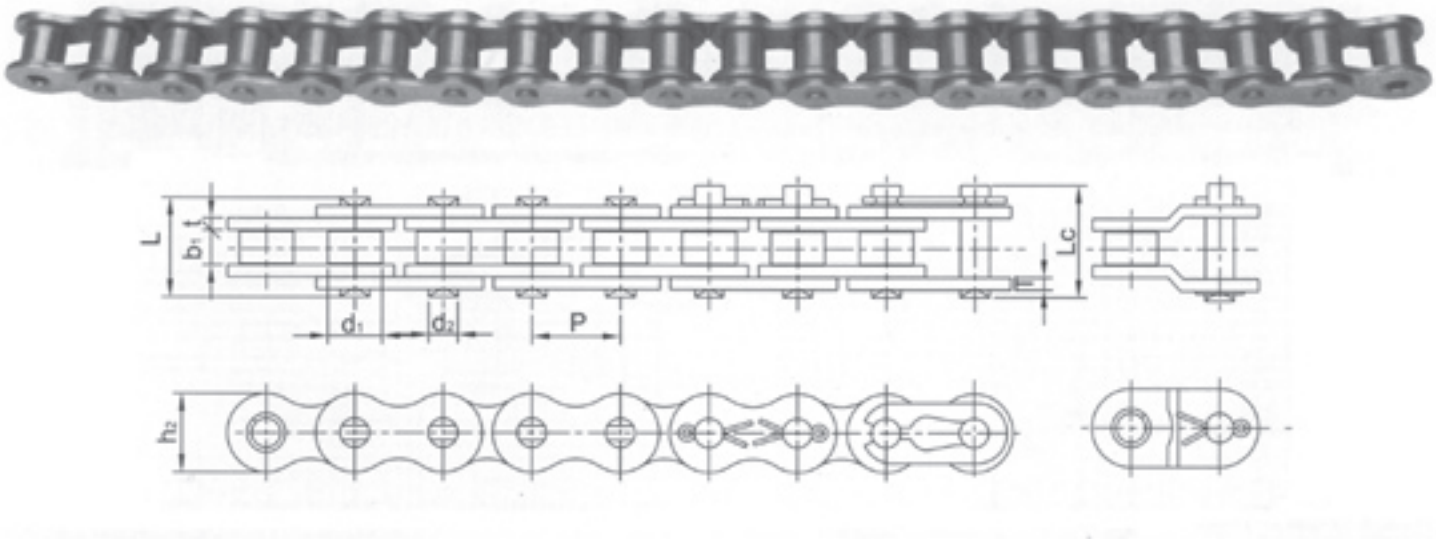


| Chain No. | Pitch | Roller diameter | Width between inter plates | Pin diameter | Pin Length | | Inner plate depth | Plate thickness | Ultimate tensile strength | Average tensile strength | Weight per meter |
|---|---|---|---|---|---|---|---|---|---|---|---|
| | P | $d_1$ max | $b_1$ min | $d_2$ max | L max | Lc max | $h_2$ max | t/T | Q(ISO/DIN) min | $Q_0$ | q = |
| | mm | mm | mm | mm | mm | mm | mm | mm | kN | kN | kg/m |
| 05B-1 | 8.00 | 5.00 | 3.00 | 2.31 | 8.20 | 8.90 | 7.10 | 0.80 | 5.00 | 5.90 | 0.20 |
| *06B-1 | 9.53 | 6.35 | 8.72 | 3.28 | 13.15 | 15.15 | 8.26 | 1.34 | 9.00 | 10.30 | 0.41 |
| 08B-1 | 12.70 | 8.51 | 5.72 | 4.45 | 16.95 | 19.05 | 11.81 | 1.60 | 18.00 | 19.60 | 0.69 |
| 10B-1 | 15.88 | 10.16 | 9.65 | 5.08 | 19.50 | 22.0 | 14.73 | 1.70 | 22.40 | 27.50 | 0.93 |
| 12B-1 | 19.05 | 12.07 | 11.68 | 5.72 | 22.50 | 25.10 | 16.13 | 1.85 | 29.00 | 33.30 | 1.15 |
| 16B-1 | 25.40 | 15.88 | 17.02 | 8.28 | 36.10 | 41.50 | 21.08 | 4.09/3.10 | 60.00 | 71.00 | 2.71 |
| 20B-1 | 31.75 | 19.05 | 19.58 | 10.19 | 42.40 | 47.60 | 26.42 | 4.60/3.60 | 95.00 | 101.80 | 3.70 |
| 24B-1 | 38.10 | 25.4 | 25.40 | 14.63 | 53.40 | 57.10 | 33.40 | 5.80/4.80 | 160.00 | 176.00 | 7.10 |
| 28B-1 | 44.45 | 27.94 | 30.99 | 15.90 | 65.10 | 69.40 | 37.08 | 7.50/6.50 | 200.00 | 215.60 | 8.50 |
| 32B-1 | 50.80 | 29.21 | 30.99 | 17.81 | 66.00 | 69.50 | 42.29 | 7.00/6.00 | 250.00 | 280.30 | 10.25 |
| 40B-1 | 63.50 | 39.37 | 38.10 | 22.89 | 82.60 | 91.30 | 52.96 | 8.50/7.5 | 355.00 | 392.00 | 16.35 |
| 48B-1 | 76.20 | 48.26 | 45.72 | 29.24 | 99.10 | 109.60 | 63.88 | 11.70/10.00 | 560.00 | 599.20 | 25.00 |

* Straight side plates.

Quality Guaranteed

# British Standard (DIN) Duplex Roller Chain

Quality Guaranteed

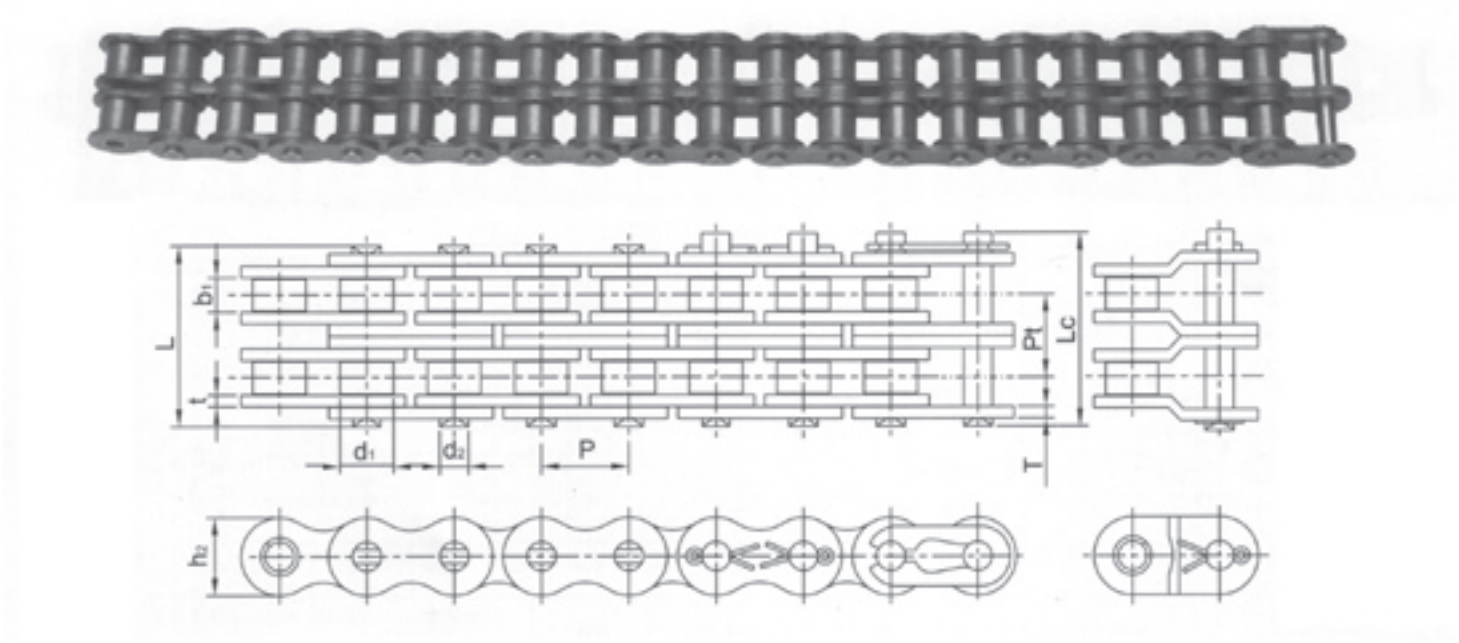


| Chain No. | Pitch | Roller diameter | Width between inter plates | Pin diameter | Pin Length | | Inner plate depth | Plate thickness | Transverse pitch | Ultimate tensile strength | Average tensile strength | Weight per meter |
|---|---|---|---|---|---|---|---|---|---|---|---|---|
| | P | $d_1$ max | $b_1$ min | $d_2$ max | L max | Lc max | $h_2$ max | t/T | Pt | Q(ISO/DIN) min | $Q_0$ | q = |
| | mm | mm | mm | mm | mm | mm | mm | mm | mm | kN | kN | kg/m |
| 05B-2 | 8.00 | 5.00 | 3.00 | 2.31 | 13.90 | 14.50 | 7.10 | 0.80 | 5.64 | 7.80 | 10.20 | 0.33 |
| *06B-2 | 9.53 | 6.35 | 5.72 | 3.28 | 23.40 | 27.10 | 8.26 | 1.34 | 10.24 | 16.90 | 18.10 | 0.74 |
| 08B-2 | 12.70 | 8.51 | 7.75 | 4.45 | 31.00 | 33.00 | 11.81 | 1.60 | 13.92 | 32.00 | 37.40 | 1.34 |
| 10B-2 | 15.88 | 10.16 | 9.65 | 5.08 | 36.10 | 38.6 | 14.73 | 1.70 | 16.59 | 44.50 | 54.20 | 1.84 |
| 12B-2 | 19.05 | 12.07 | 11.68 | 5.72 | 42.00 | 44.40 | 16.13 | 1.85 | 19.46 | 57.80 | 66.60 | 2.31 |
| 16B-2 | 25.40 | 15.88 | 17.02 | 8.28 | 68.00 | 73.40 | 21.08 | 4.09/3.10 | 31.88 | 106.00 | 126.50 | 5.42 |
| 20B-2 | 31.75 | 19.05 | 19.58 | 10.19 | 79.70 | 83.60 | 26.42 | 4.60/3.60 | 36.45 | 170.00 | 210.00 | 7.20 |
| 24B-2 | 38.10 | 25.4 | 25.40 | 14.63 | 101.80 | 105.42 | 33.40 | 5.80/4.80 | 48.36 | 280.00 | 305.50 | 13.40 |
| 28B-2 | 44.45 | 27.94 | 30.99 | 15.90 | 124.70 | 128.96 | 37.08 | 7.50/6.50 | 59.56 | 360.00 | 390.50 | 16.60 |
| 32B-2 | 50.80 | 29.21 | 30.99 | 17.81 | 124.60 | 128.05 | 42.29 | 7.00/6.00 | 58.55 | 450.00 | 487.50 | 21.00 |
| 40B-2 | 63.50 | 39.37 | 38.10 | 22.89 | 154.50 | 163.80 | 52.96 | 8.50/7.50 | 72.29 | 630.00 | 680.20 | 32.00 |
| 48B-2 | 76.20 | 48.26 | 45.72 | 29.24 | 190.40 | 200.90 | 63.88 | 11.70/10.00 | 91.21 | 1000.00 | 1070.00 | 50.00 |

* Straight side plates.

Quality Guaranteed

# British Standard (DIN) Triplex Roller Chain

Quality Guaranteed

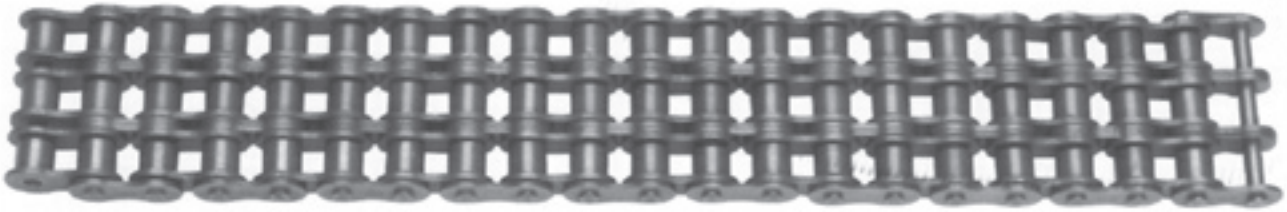

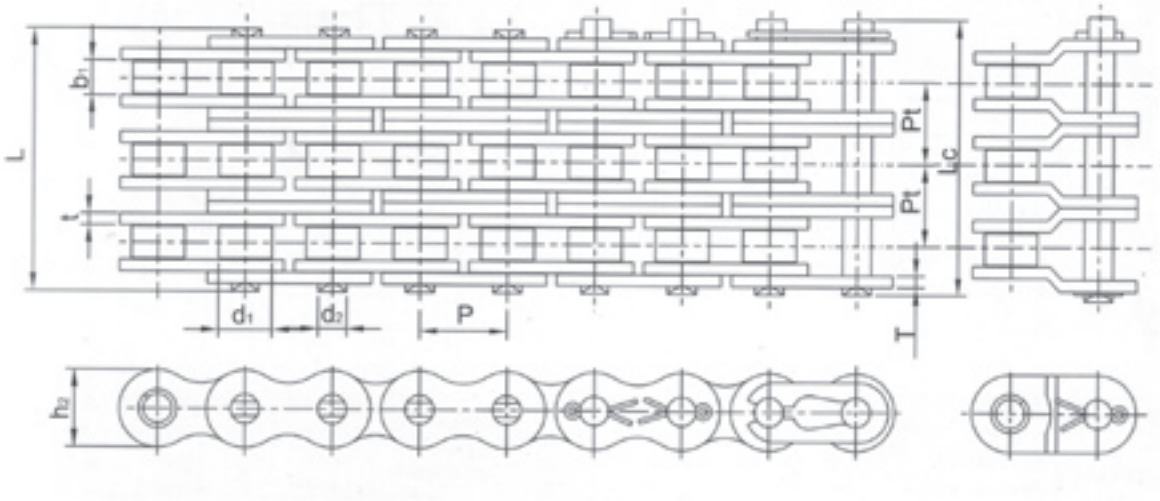


| Chain No. | Pitch | Roller diameter | Width between inter plates | Pin diameter | Pin Length | | Inner plate depth | Plate thickness | Transverse pitch | Ultimate tensile strength | Average tensile strength | Weight per meter |
|---|---|---|---|---|---|---|---|---|---|---|---|---|
| | P | $d_1$ max | $b_1$ min | $d_2$ max | L max | Lc max | $h_2$ max | t/T | Pt | Q(ISO/DIN) min | $Q_0$ | q = |
| | mm | mm | mm | mm | mm | mm | mm | mm | mm | kN | kN | kg/m |
| *06B-3 | 9.53 | 6.35 | 5.72 | 3.28 | 33.50 | 37.30 | 8.26 | 1.34 | 10.24 | 24.90 | 29.80 | 1.16 |
| 08B-3 | 12.70 | 8.51 | 7.75 | 4.45 | 44.90 | 47.20 | 11.81 | 1.60 | 13.92 | 47.50 | 50.20 | 2.03 |
| 10B-3 | 15.88 | 10.16 | 9.65 | 5.08 | 52.70 | 55.6 | 14.73 | 1.70 | 16.59 | 66.70 | 79.80 | 2.77 |
| 12B-3 | 19.05 | 12.07 | 11.68 | 5.72 | 61.50 | 65.20 | 16.13 | 1.85 | 19.46 | 86.70 | 101.80 | 3.46 |
| 16B-3 | 25.40 | 15.88 | 17.02 | 8.28 | 99.80 | 105.30 | 21.08 | 4.09/3.10 | 31.88 | 160.00 | 190.00 | 8.13 |
| 20B-3 | 31.75 | 19.05 | 19.58 | 10.19 | 114.55 | 121.20 | 26.42 | 4.60/3.60 | 36.45 | 250.00 | 276.25 | 10.82 |
| 24B-3 | 38.10 | 25.4 | 25.40 | 14.63 | 150.20 | 153.82 | 33.40 | 5.80/4.80 | 48.36 | 425.00 | 480.00 | 20.10 |
| 28B-3 | 44.45 | 27.94 | 30.99 | 15.90 | 184.30 | 188.52 | 37.08 | 7.50/6.50 | 59.56 | 530.00 | 580.00 | 24.92 |
| 32B-3 | 50.80 | 29.21 | 30.99 | 17.81 | 184.01 | 186.60 | 42.29 | 7.00/6.00 | 58.55 | 670.00 | 720.20 | 31.56 |
| 40B-3 | 63.50 | 39.37 | 38.10 | 22.89 | 226.80 | 236.10 | 52.96 | 8.50/7.50 | 72.29 | 950.00 | 1020.00 | 48.10 |
| 48B-3 | 76.20 | 48.26 | 45.72 | 29.24 | 281.60 | 292.10 | 63.88 | 11.70/10.00 | 91.21 | 1500.00 | 1590.00 | 75.00 |

* Straight side plates.

Quality Guaranteed

# American & British Standard Chain Attachments

Quality Guaranteed

BA-1 (One side)

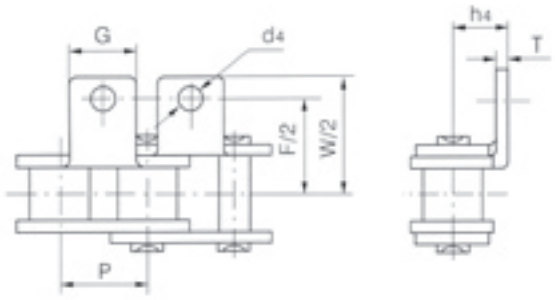


BK-1 (Both sides)

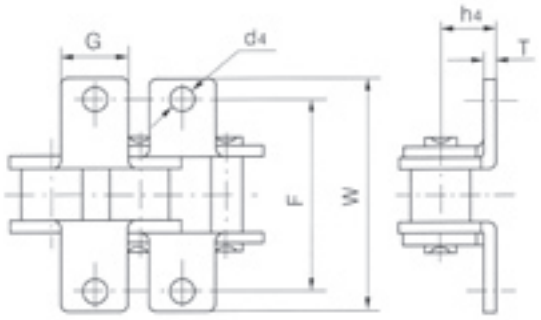


| Chain No. | P | G | F | W | T | h4 | d4 |
|---|---|---|---|---|---|---|---|
| | mm | mm | mm | mm | mm | mm | mm |
| 35 | 9.525 | 7.95 | 19.00 | 26.2 | 1.30 | 6.35 | 2.8 |
| 40 | 12.700 | 9.50 | 25.40 | 35.2 | 1.50 | 7.90 | 3.4 |
| 50 | 15.875 | 12.70 | 31.75 | 46.2 | 2.03 | 10.30 | 5.5 |
| 60 | 19.050 | 15.90 | 38.10 | 55.6 | 2.42 | 11.90 | 5.5 |
| 80 | 25.400 | 19.10 | 50.80 | 64.8 | 3.25 | 15.90 | 6.8 |
| 100 | 31.750 | 25.40 | 63.50 | 87.3 | 4.00 | 19.80 | 9.2 |
| 120 | 38.100 | 28.60 | 76.20 | 108.5 | 4.80 | 23.00 | 9.8 |
| 140 | 44.450 | 34.90 | 88.90 | 123.0 | 5.60 | 28.60 | 11.4 |
| 160 | 50.800 | 38.10 | 101.60 | 142.8 | 6.40 | 31.75 | 13.1 |
| 06B | 9.525 | 8.00 | 19.04 | 27.0 | 1.30 | 6.50 | 3.5 |
| 08B | 12.700 | 9.50 | 25.40 | 36.4 | 1.60 | 8.90 | 4.5 |
| 10B | 15.875 | 14.30 | 31.75 | 44.6 | 1.70 | 10.31 | 5.3 |
| 12B | 19.050 | 16.00 | 38.10 | 52.4 | 1.85 | 13.46 | 6.4 |
| 16B | 25.400 | 19.10 | 50.80 | 72.6 | 3.10 | 15.88 | 6.4 |
| 20B | 31.750 | 35.00 | 63.50 | 100.5 | 3.50 | 19.80 | 9.0 |
| 24B | 38.100 | 30.00 | 76.20 | 108.4 | 4.80 | 26.67 | 10.5 |
| 28B | 44.450 | 35.00 | 88.90 | 123.0 | 6.00 | 28.58 | 13.1 |
| 32B | 50.800 | 38.10 | 101.60 | 142.8 | 6.00 | 31.75 | 13.1 |

Quality Guaranteed

# American & British Standard Chain Attachments

Quality Guaranteed

SA-1/M1 (One side)

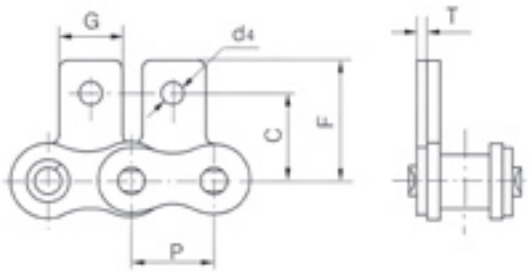


SK-1/M1 (Both sides)

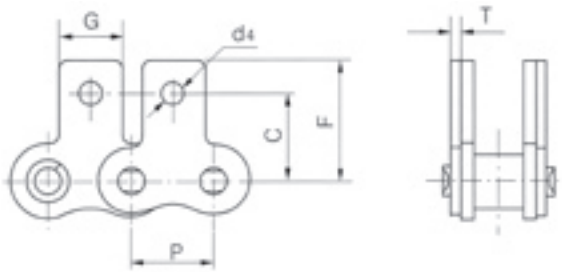


| Chain No. | P | G | C | F | T | d4 |
|---|---|---|---|---|---|---|
| | mm | mm | mm | mm | mm | mm |
| 35 | 9.525 | 7.95 | 9.50 | 14.55 | 1.30 | 2.8 |
| 40 | 12.700 | 9.50 | 12.70 | 19.05 | 1.50 | 3.4 |
| 50 | 15.875 | 12.70 | 15.90 | 25.25 | 2.03 | 5.5 |
| 60 | 19.050 | 15.90 | 18.30 | 29.33 | 2.42 | 5.5 |
| 80 | 25.400 | 19.10 | 24.60 | 34.70 | 3.25 | 6.8 |
| 100 | 31.750 | 25.40 | 31.80 | 43.30 | 4.00 | 9.2 |
| 120 | 38.100 | 28.60 | 36.50 | 51.60 | 4.80 | 9.8 |
| 140 | 44.450 | 34.90 | 44.50 | 62.00 | 5.60 | 11.4 |
| 160 | 50.800 | 38.10 | 50.80 | 69.85 | 6.40 | 13.1 |
| 06B | 9.525 | 8.0 | 9.52 | 13.50 | 1.30 | 3.5 |
| 08B | 12.700 | 9.50 | 13.05 | 17.95 | 1.60 | 4.3 |
| 10B | 15.875 | 14.30 | 16.30 | 22.90 | 1.70 | 5.3 |
| 12B | 19.050 | 16.00 | 21.20 | 28.40 | 1.85 | 6.4 |
| 16B | 25.400 | 19.10 | 23.15 | 34.00 | 3.10 | 6.4 |
| 20B | 31.750 | 35.00 | 30.50 | 45.70 | 3.50 | 9.0 |

Quality Guaranteed

# American & British Standard Chain Attachments

Quality Guaranteed

WBA-1 WBA-2

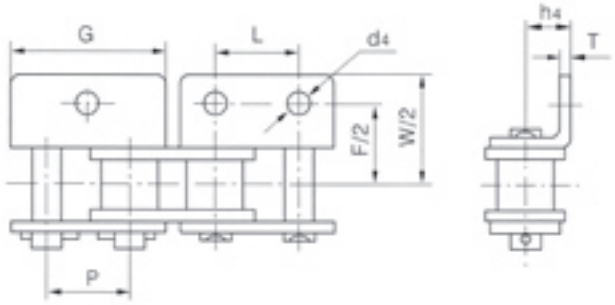


WBK-1 WBK-2

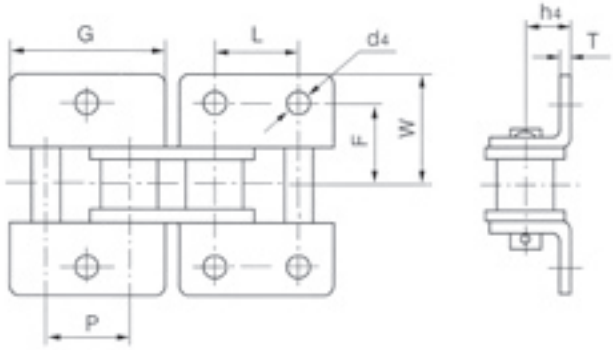


| Chain No. | P | G | L | F | W | T | h4 | d4 |
|---|---|---|---|---|---|---|---|---|
| | mm | mm | mm | mm | mm | mm | mm | mm |
| 35 | 9.525 | 16.82 | 9.525 | 19.00 | 26.2 | 1.30 | 6.35 | 2.8 |
| 40 | 12.700 | 23.00 | 12.700 | 25.40 | 35.6 | 1.50 | 7.90 | 3.4 |
| 50 | 15.875 | 28.80 | 15.875 | 31.75 | 46.8 | 2.03 | 10.30 | 5.5 |
| 60 | 19.050 | 34.65 | 19.050 | 38.10 | 56.4 | 2.42 | 11.90 | 5.5 |
| 80 | 25.400 | 45.90 | 25.400 | 50.80 | 73.2 | 3.25 | 15.90 | 6.8 |
| 100 | 31.750 | 57.65 | 31.750 | 63.50 | 89.8 | 4.00 | 19.80 | 9.2 |
| 120 | 38.100 | 69.30 | 38.100 | 76.20 | 108.8 | 4.80 | 23.00 | 9.8 |
| 140 | 44.450 | 80.45 | 44.450 | 88.90 | 123.0 | 5.60 | 28.60 | 11.4 |
| 160 | 50.800 | 92.00 | 50.800 | 101.60 | 142.8 | 6.40 | 31.75 | 13.1 |
| 200 | 63.500 | 115.5 | 63.500 | 127.00 | 179.00 | 8.00 | 42.88 | 16.3 |
| 08B | 12.700 | 24.00 | 12.700 | 25.40 | 36.4 | 1.60 | 8.90 | 4.3 |
| 10B | 15.875 | 29.58 | 15.875 | 31.80 | 44.6 | 1.70 | 10.31 | 5.3 |
| 12B | 19.050 | 34.05 | 19.050 | 38.10 | 52.4 | 1.85 | 13.46 | 6.4 |
| 16B | 25.400 | 46.40 | 25.400 | 50.80 | 72.6 | 3.10 | 15.88 | 6.4 |
| 20B | 31.750 | 58.10 | 31.750 | 63.00 | 100.5 | 3.50 | 19.80 | 9.0 |
| 24B | 38.100 | 71.30 | 38.100 | 76.20 | 108.4 | 4.8 | 26.67 | 10.5 |
| 28B | 44.450 | 81.1 | 44.450 | 88.90 | 123.0 | 6.0 | 28.58 | 13.1 |
| 32B | 50.800 | 92.8 | 50.800 | 101.60 | 142.8 | 6.0 | 31.75 | 13.1 |

Quality Guaranteed

# American & British Standard Chain Attachments

Quality Guaranteed

WSA-1 WSA-2

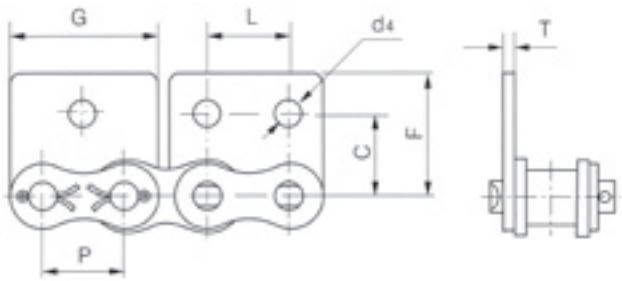


WSK-1 WSK-2

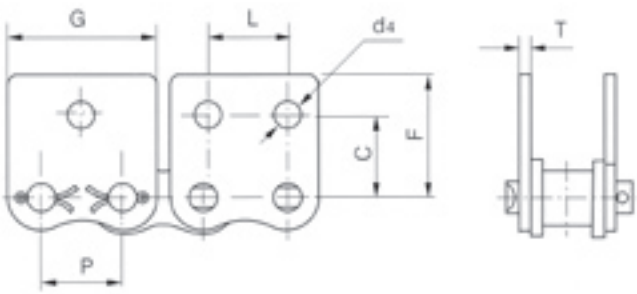


| Chain No. | P | G | L | C | F | T | d4 |
|---|---|---|---|---|---|---|---|
| | mm | mm | mm | mm | mm | mm | mm |
| 35 | 9.525 | 16.83 | 9.525 | 9.50 | 14.55 | 1.30 | 2.8 |
| 40 | 12.700 | 23.00 | 12.700 | 12.70 | 17.40 | 1.50 | 3.4 |
| 50 | 15.875 | 28.80 | 15.875 | 15.90 | 23.05 | 2.03 | 5.5 |
| 60 | 19.050 | 34.65 | 19.050 | 18.30 | 26.86 | 2.42 | 5.5 |
| 80 | 25.400 | 45.90 | 25.400 | 24.60 | 35.45 | 3.25 | 6.8 |
| 100 | 31.750 | 57.65 | 31.750 | 31.80 | 44.00 | 4.00 | 9.2 |
| 120 | 38.100 | 69.30 | 38.100 | 36.50 | 51.60 | 4.80 | 9.8 |
| 140 | 44.450 | 80.45 | 44.450 | 44.50 | 62.00 | 5.60 | 11.4 |
| 160 | 50.800 | 92.00 | 50.800 | 50.80 | 69.85 | 6.40 | 13.1 |
| 08B | 12.700 | 23.30 | 12.700 | 13.05 | 17.95 | 1.60 | 4.3 |
| 10B | 15.875 | 29.58 | 15.875 | 16.30 | 22.90 | 1.70 | 5.3 |
| 12B | 19.050 | 34.05 | 19.050 | 21.20 | 28.40 | 1.85 | 6.4 |
| 16B | 25.400 | 46.40 | 25.400 | 23.15 | 34.00 | 3.10 | 6.4 |
| 20B | 31.750 | 58.10 | 31.750 | 30.50 | 45.70 | 3.50 | 9.0 |

# American & British Standard Chain With Extended Pins

Quality Guaranteed

D-1

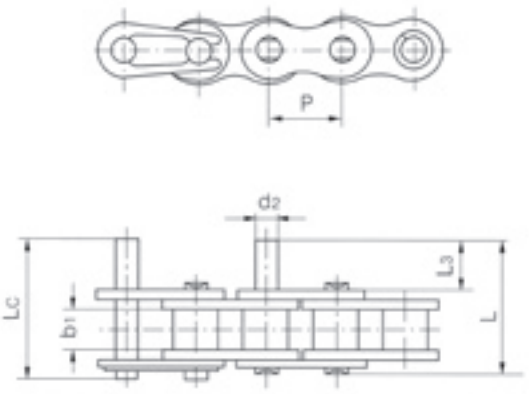


D-3

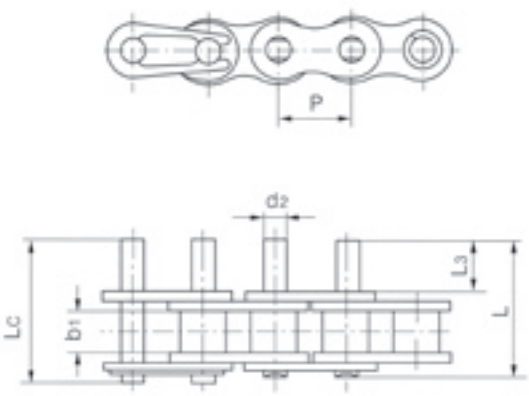


| Chain No. | P | b1 | d2 | L3 | L | LC |
|---|---|---|---|---|---|---|
| | mm | mm | mm | mm | mm | mm |
| 25 | 6.350 | 3.18 | 2.31 | 3.0 | 10.2 | 10.7 |
| 35 | 9.525 | 4.77 | 3.58 | 9.5 | 20.8 | 21.6 |
| 40 | 12.700 | 7.85 | 3.96 | 9.5 | 25.1 | 26.2 |
| 50 | 15.875 | 9.40 | 5.08 | 11.9 | 31.1 | 33.1 |
| 60 | 19.050 | 12.57 | 5.94 | 14.3 | 38.6 | 40.6 |
| 80 | 25.400 | 15.75 | 7.92 | 19.1 | 50.3 | 53.3 |
| 100 | 31.750 | 18.90 | 9.53 | 23.8 | 61.8 | 66.1 |
| 120 | 38.100 | 25.22 | 11.10 | 28.6 | 76.4 | 80.4 |
| 140 | 44.450 | 25.22 | 12.70 | 33.3 | 84.8 | 89.4 |
| 160 | 50.800 | 31.55 | 14.27 | 38.1 | 99.6 | 104.4 |
| 06B | 9.525 | 5.72 | 3.28 | 9.0 | 21.3 | 22.2 |
| 08B | 12.700 | 7.75 | 4.45 | 9.5 | 25.1 | 26.6 |
| 10B | 15.875 | 9.65 | 5.08 | 11.9 | 30.1 | 31.5 |
| 12B | 19.050 | 11.68 | 5.72 | 14.3 | 35.4 | 37.1 |
| 16B | 25.400 | 17.02 | 8.28 | 19.1 | 53.0 | 54.3 |

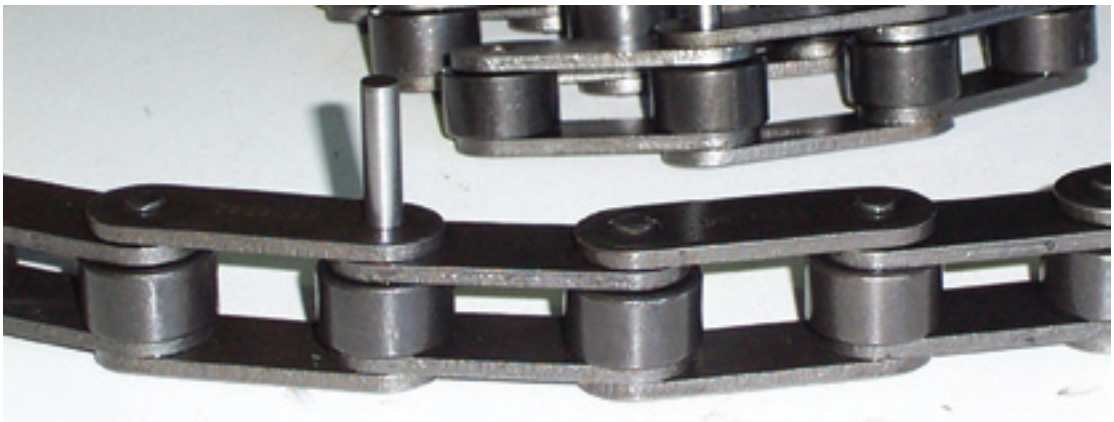

Quality Guaranteed

# American & British Standard Stainless Steel Roller Chain

Quality Guaranteed

**Stainless steel chains are suitable for operation in an environment requiring high thermal resistance (-20°C to 400°C), corrosion resistance and cleanliness. They can be also fitted with attachments for conveyor purposes.**

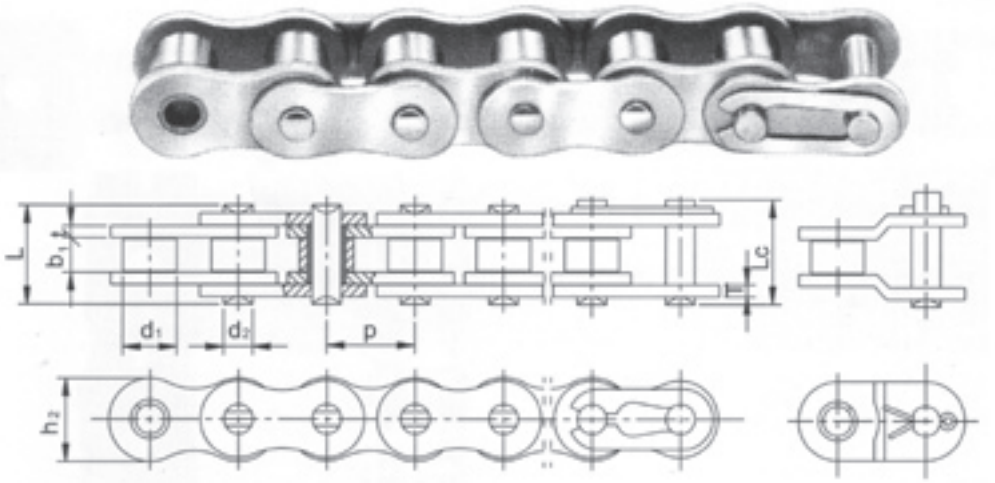


| Chain No. | Pitch | Roller diameter | Width between inter plates | Pin diameter | Pin Length | | Inner plate depth | Plate thickness | Ultimate tensile strength | Average tensile strength | Weight per meter |
|---|---|---|---|---|---|---|---|---|---|---|---|
| | P | $d_1$ max | $b_1$ min | $d_2$ max | L max | Lc max | $h_2$ max | t/T | Q(ISO/DIN) min | $Q_0$ | q = |
| | mm | mm | mm | mm | mm | mm | mm | mm | kN/LB | kN | kg/m |
| *35SS | 9.53 | 5.08 | 4.77 | 3.58 | 12.40 | 13.17 | 9.00 | 1.30 | 5.50 | 6.60 | 0.33 |
| 40SS | 12.70 | 7.95 | 7.85 | 3.96 | 16.60 | 17.80 | 12.20 | 1.50 | 9.70 | 11.60 | 0.63 |
| 50SS | 15.88 | 10.16 | 9.40 | 5.08 | 20.70 | 22.2 | 15.09 | 2.06 | 15.30 | 18.50 | 1.03 |
| 60SS | 19.05 | 11.91 | 12.57 | 5.94 | 25.9 | 27.70 | 18.00 | 2.44 | 21.80 | 26.40 | 1.51 |
| 80SS | 25.40 | 15.88 | 15.75 | 7.92 | 32.7 | 35.00 | 24.00 | 3.26 | 38.90 | 46.60 | 2.62 |
| 100SS | 31.75 | 19.05 | 18.90 | 9.53 | 40.40 | 44.70 | 30.00 | 4.00 | 59.00 | 70.20 | 3.94 |
| #06BSS | 9.53 | 6.35 | 5.72 | 3.28 | 13.15 | 14.10 | 8.20 | 1.30 | 6.20 | 7.30 | 0.41 |
| 08BSS | 12.70 | 8.51 | 7.75 | 4.45 | 16.70 | 18.20 | 11.80 | 1.60 | 12.00 | 14.30 | 0.70 |
| 10BSS | 15.88 | 10.16 | 9.65 | 5.08 | 19.50 | 20.90 | 14.70 | 1.70 | 14.50 | 17.20 | 0.94 |
| 12BSS | 19.05 | 12.07 | 11.68 | 5.72 | 22.50 | 24.20 | 16.00 | 1.85 | 18.50 | 22.00 | 1.16 |
| 16BSS | 25.40 | 15.88 | 17.02 | 8.28 | 36.10 | 37.40 | 21.00 | 4.15/3.10 | 40.00 | 47.60 | 2.13 |
| 20BSS | 31.75 | 19.05 | 19.56 | 10.19 | 41.30 | 45.00 | 26.40 | 4.50/3.50 | 59.00 | 69.60 | 3.73 |

*Bushing chain : $d_1$ in the table indicates the external diameter of the bushing
#Straight side plates

# Hollow Pin Chains
# American Standard

Quality Guaranteed

Type A

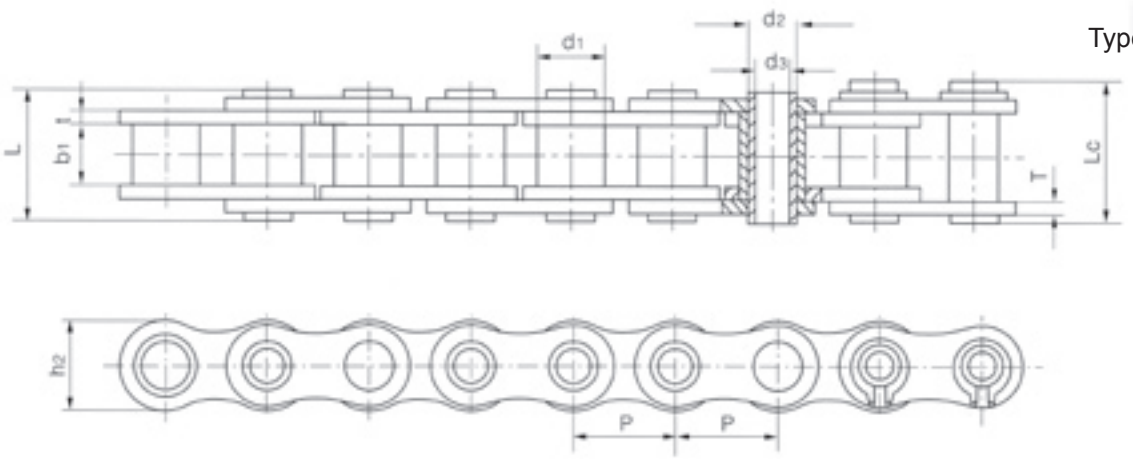


Type B

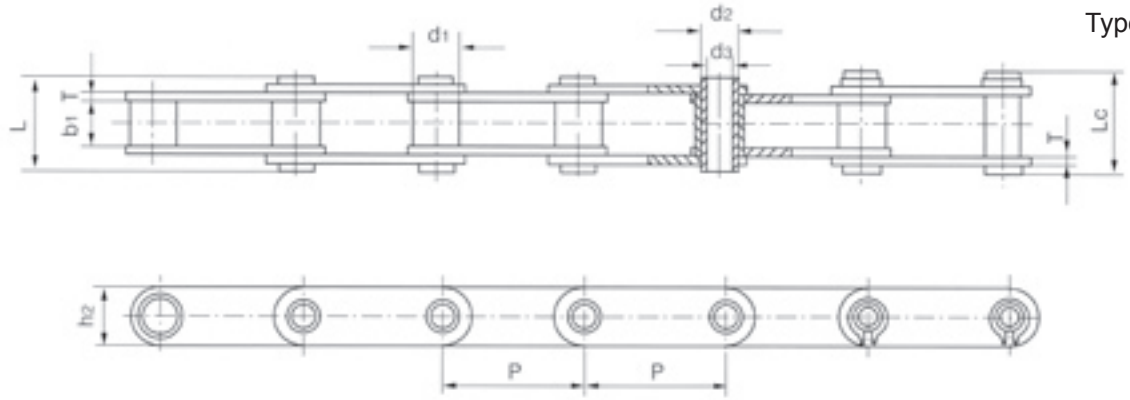


| Chain No. | Pitch | Bush diameter | Width between inner plates | Pin diameter | | Pin length | | Inner plate depth | Plate thickness | Ultimate tensile strength | Average tensile strength | Weight per meter | Type |
|---|---|---|---|---|---|---|---|---|---|---|---|---|---|
| | P | d1 max | b1 min | d2 max | d3 max | L max | Lc max | h2 max | t/T max | Q min | Qo | q | |
| | mm | mm | mm | mm | mm | mm | mm | mm | mm | KN | KN | Kg/m | |
| 40HP | 12.700 | 7.95 | 7.85 | 5.63 | 4.00 | 16.5 | 17.6 | 12.00 | 1.50 | 11.0 | 12.2 | 0.54 | A |
| 50HP | 15.875 | 10.16 | 9.40 | 7.03 | 5.13 | 20.7 | 21.9 | 15.09 | 2.03 | 20.0 | 22.6 | 0.91 | A |
| 60HP | 19.050 | 11.91 | 12.70 | 8.31 | 6.00 | 25.9 | 26.8 | 18.00 | 2.42 | 24.0 | 26.9 | 1.29 | A |
| 80HP | 25.400 | 15.88 | 15.75 | 11.40 | 8.05 | 32.7 | 33.8 | 24.00 | 3.25 | 50.0 | 58.3 | 2.26 | A |
| C2040HP | 25.400 | 7.95 | 7.85 | 5.63 | 4.00 | 16.5 | 17.6 | 12.00 | 1.50 | 11.0 | 12.6 | 0.46 | B |
| C2050HP | 31.750 | 10.16 | 9.40 | 7.03 | 5.13 | 20.7 | 21.9 | 15.00 | 2.03 | 20.4 | 22.8 | 0.76 | B |
| C2060HP | 38.100 | 11.91 | 12.70 | 8.33 | 6.00 | 25.9 | 26.8 | 18.00 | 2.42 | 24.0 | 27.1 | 1.02 | B |
| C2080HP | 50.800 | 15.88 | 15.75 | 11.50 | 8.05 | 32.5 | 33.8 | 24.00 | 3.25 | 50.0 | 55.2 | 1.81 | B |

Quality Guaranteed

# Hollow Pin Chains
# American Standard Double Pitch

Quality Guaranteed

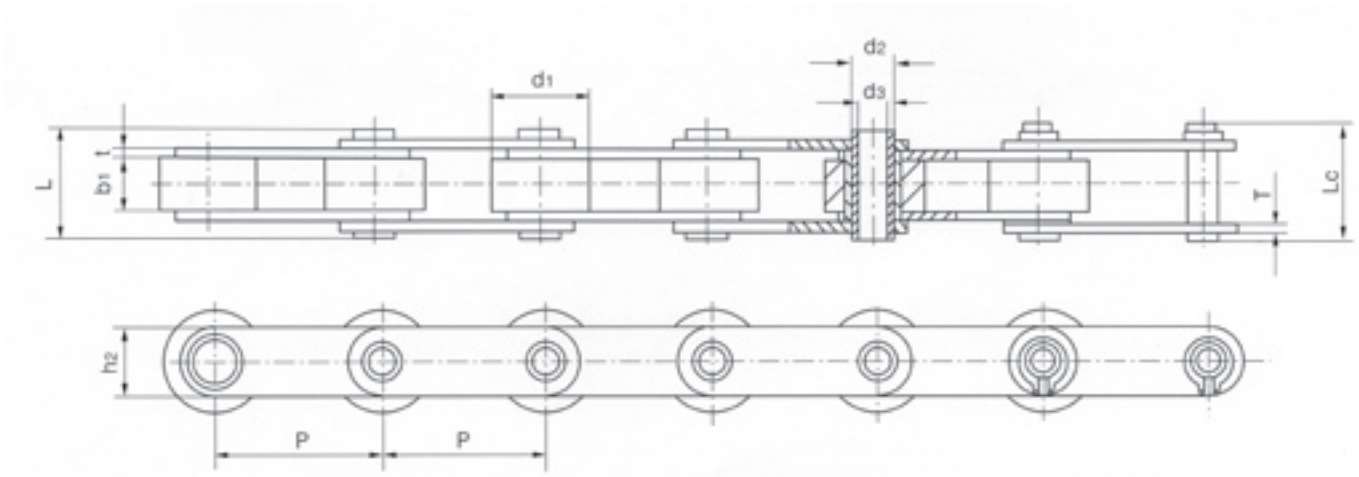


| Chain No. | Pitch | Roller diameter | Width between inner plates | Pin diameter | | Pin length | | Inner plate depth | Plate thickness | Ultimate tensile strength | Average tensile strength | Weight per meter |
|---|---|---|---|---|---|---|---|---|---|---|---|---|
| | P | d1 max | b1 min | d2 max | d3 max | L max | Lc max | h2 max | t/T max | Q min | Qo | q |
| | mm | mm | mm | mm | mm | mm | mm | mm | mm | KN | KN | Kg/m |
| C2042HP | 25.40 | 15.88 | 7.85 | 5.63 | 4.00 | 16.5 | 17.6 | 12.0 | 1.50 | 11.0 | 12.6 | 0.78 |
| C2052HP | 31.75 | 19.05 | 9.53 | 7.22 | 5.12 | 20.5 | 21.8 | 15.0 | 2.03 | 20.4 | 22.8 | 1.25 |
| C2062HP | 38.10 | 22.23 | 12.70 | 8.33 | 6.00 | 25.9 | 26.8 | 18.0 | 2.42 | 24.0 | 27.1 | 1.72 |
| C2082HP | 50.80 | 28.58 | 15.75 | 11.40 | 8.05 | 32.4 | 33.8 | 24.0 | 3.25 | 50.0 | 55.2 | 2.82 |
| C2052HPF1 | 31.75 | 19.05 | 9.40 | 7.03 | 5.12 | 20.0 | 21.5 | 15.3 | 1.85 | 15.0 | 17.3 | 1.21 |
| C2042H-HP | 25.40 | 15.88 | 7.85 | 5.63 | 4.00 | 18.8 | 19.9 | 12.0 | 2.03 | 11.0 | 13.2 | 0.95 |
| C2052H-HP | 31.75 | 19.05 | 9.53 | 7.22 | 5.12 | 22.1 | 23.4 | 15.0 | 2.42 | 20.4 | 23.5 | 1.44 |
| C2062H-HP | 38.10 | 22.23 | 12.70 | 8.33 | 6.00 | 29.2 | 30.2 | 17.0 | 3.25 | 24.0 | 27.6 | 1.99 |
| C2082H-HP | 50.80 | 28.58 | 15.75 | 11.40 | 8.05 | 36.2 | 37.6 | 24.0 | 4.00 | 50.0 | 56.5 | 3.26 |

# Hollow Pin Chains
# British Standard

Quality Guaranteed

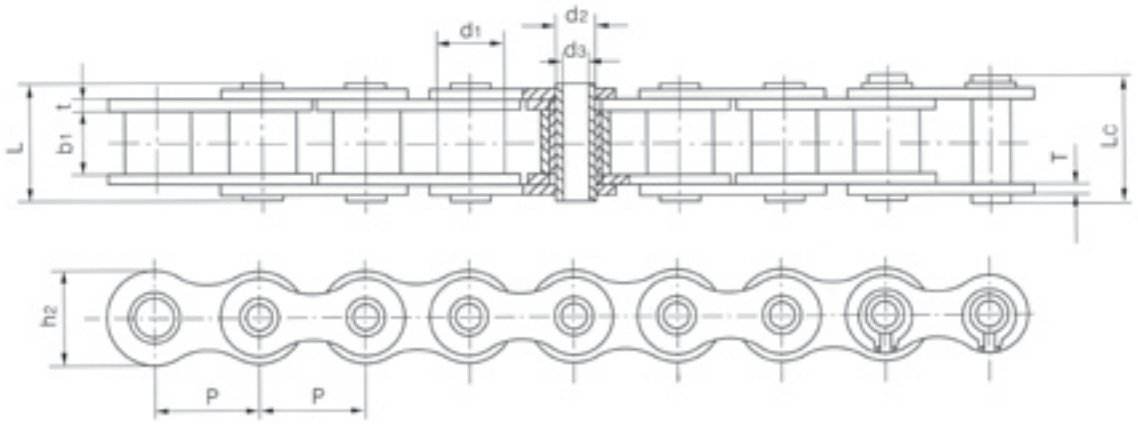


| Chain No. | Pitch | Roller diameter | Width between inner plates | Pin diameter | | Pin length | | Inner plate depth | Plate thickness | Ultimate tensile strength | Average tensile strength | Weight per meter | Type |
|---|---|---|---|---|---|---|---|---|---|---|---|---|---|
| | P | d1 max | b1 min | d2 max | d3 max | L max | Lc max | h2 max | t/T max | Q min | Qo | q | |
| | mm | mm | mm | mm | mm | mm | mm | mm | mm | KN | KN | Kg/m | |
| 08BHP | 12.700 | 8.510 | 7.75 | 6.37 | 4.00 | 16.7 | 18.0 | 11.8 | 1.6 | 11.00 | 12.4 | 0.61 | A |
| 10BHB | 15.875 | 10.16 | 9.65 | 5.94 | 4.04 | 19.3 | 20.6 | 14.7 | 1.70 | 17.00 | 20.8 | 0.86 | A |
| 12BHB | 19.050 | 12.07 | 11.68 | 6.50 | 4.00 | 21.6 | 22.8 | 15.9 | 1.85 | 23.60 | 25.9 | 1.09 | A |
| 16BHB | 25.400 | 15.88 | 12.70 | 9.53 | 7.05 | 30.8 | 32.2 | 23.0 | 4.15/3.1 | 40.00 | 45.0 | 2.28 | A |

Quality Guaranteed

# Motorcycle Chain
# Standard & Heavy Duty

Quality Guaranteed

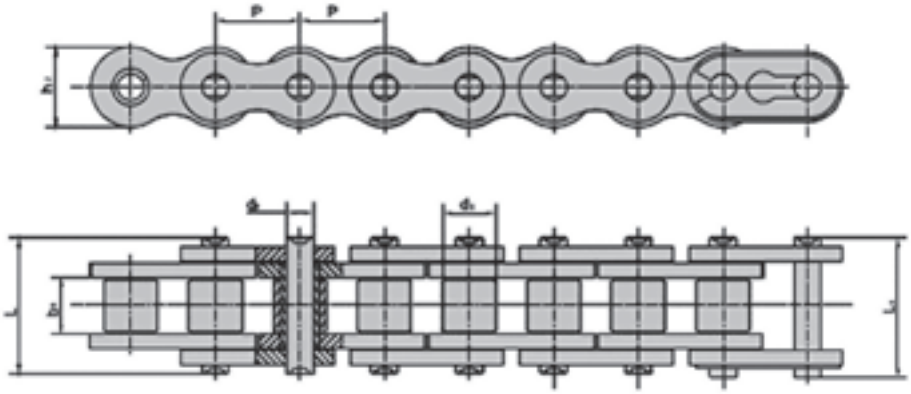

| Chain No. | Pitch | Roller Diameter | Width between inner plates | Pin Diameter | Pin Length | | Inner plate depth | Plate Thickness | Ultimate tensile strength | Average tensile strength | Weight per meter |
|---|---|---|---|---|---|---|---|---|---|---|---|
| | P | d1 max | b1 min | d2 max | L max | Lc max | h2 max | max | Q min | Qo | q |
| | mm | mm | mm | mm | mm | mm | mm | mm | kN | kN | kg/m |
| 219H | 7.774 | 4.59 | 5.0 | 3.01 | 12.00 | 12.00 | 7.6 | 1.0 | 6.6 | 7.9 | 0.27 |
| 415 | 12.70 | 7.75 | 5.10 | 3.96 | 12.50 | 13.80 | 10.40 | 1.5 | 11.60 | 12.50 | 0.46 |
| 415H | 12.70 | 7.75 | 4.76 | 3.96 | 13.10 | 14.50 | 12.00 | 1.8 | 14.40 | 16.10 | 0.50 |
| 420 | 12.70 | 7.77 | 6.35 | 3.96 | 14.75 | 16.10 | 12.00 | 1.5 | 16.00 | 16.50 | 0.55 |
| 420H | 12.70 | 7.77 | 6.35 | 3.96 | 16.00 | 17.40 | 12.00 | 1.8 | 17.00 | 17.50 | 0.69 |
| 428 | 12.70 | 8.51 | 7.75 | 4.45 | 16.70 | 18.05 | 12.00 | 1.5 | 17.80 | 18.50 | 0.70 |
| 428H | 12.70 | 8.51 | 7.94 | 4.51 | 18.90 | 20.10 | 12.00 | 2.0 | 20.60 | 21.50 | 0.79 |
| 520 | 15.875 | 10.16 | 6.35 | 5.08 | 17.70 | 19.00 | 15.00 | 2.0 | 26.50 | 29.50 | 0.89 |
| 520H | 15.875 | 10.16 | 6.35 | 5.24 | 19.15 | 20.50 | 15.00 | 2.4 | 30.00 | 31.00 | 0.96 |
| 525 | 15.875 | 10.16 | 7.96 | 5.08 | 19.40 | 20.90 | 15.00 | 2.0 | 26.50 | 29.00 | 0.93 |
| 525H | 15.875 | 10.16 | 7.95 | 5.24 | 20.90 | 22.20 | 15.00 | 2.4 | 30.00 | 31.00 | 1.00 |
| 530 | 15.875 | 10.16 | 9.40 | 5.08 | 20.90 | 22.20 | 15.00 | 2.0 | 26.50 | 29.70 | 1.06 |
| 530H | 15.875 | 10.16 | 9.40 | 5.24 | 22.50 | 24.20 | 15.00 | 2.4 | 30.00 | 31.50 | 1.15 |
| 630 | 19.05 | 11.91 | 9.40 | 5.94 | 22.70 | 24.00 | 18.00 | 2.4 | 35.00 | 37.00 | 1.50 |

# Motorcycle O-Ring Chain
# Standard and Heavy Duty

Quality Guaranteed

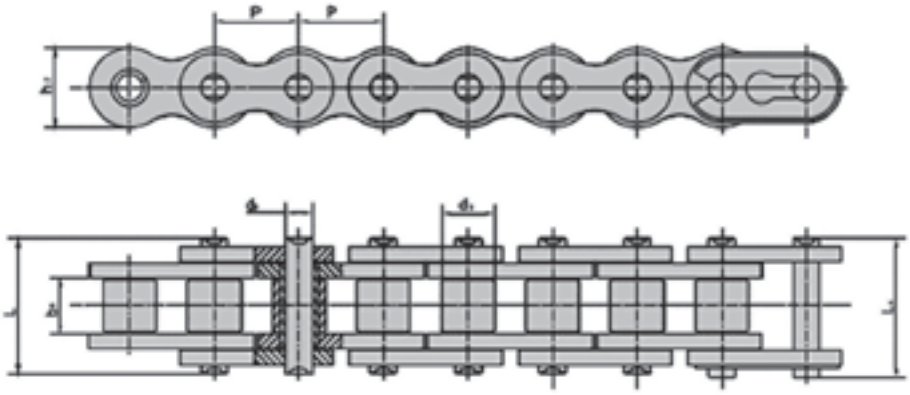

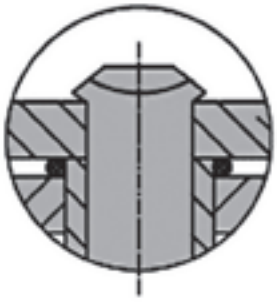

| Chain No. | Pitch | Roller Diameter | Width between inner plates | Pin Diameter | Pin Length | | Inner Plate Depth | Plate thickness | Ultimate tensile strength | Weight per meter |
|---|---|---|---|---|---|---|---|---|---|---|
| | P | d1 Max | b1 Min | d2 max | L max | Lc max | h2 max | max | Q min | q |
| | mm | mm | mm | mm | mm | mm | mm | mm | kN | kg/m |
| 420-0 | 12.70 | 7.77 | 6.25 | 3.96 | 17.60 | 18.80 | 12.00 | 1.50 | 16.0 | 0.60 |
| 428-0 | 12.70 | 8.50 | 7.75 | 4.45 | 19.60 | 21.00 | 12.00 | 1.60 | 18.0 | 0.82 |
| 520-0 | 15.875 | 10.16 | 6.35 | 5.08 | 20.20 | 21.50 | 15.00 | 2.03 | 26.5 | 1.04 |
| 525-0 | 15.875 | 10.16 | 7.95 | 5.08 | 21.75 | 23.00 | 15.00 | 2.03 | 26.5 | 1.10 |
| 530-0 | 15.875 | 10.16 | 9.40 | 5.08 | 23.90 | 25.10 | 15.00 | 2.03 | 26.5 | 1.16 |
| 630-0 | 19.05 | 11.91 | 9.40 | 5.94 | 25.25 | 26.50 | 18.00 | 2.42 | 35.0 | 1.52 |
| 420H-0 | 12.70 | 7.77 | 6.25 | 3.96 | 18.90 | 20.20 | 12.00 | 1.80 | 17.0 | 0.73 |
| 428H-0 | 12.70 | 8.50 | 7.94 | 4.45 | 20.10 | 21.50 | 12.30 | 2.03 | 22.0 | 0.85 |
| 520H-0 | 15.875 | 10.16 | 6.35 | 5.08 | 20.20 | 21.70 | 15.00 | 2.25 | 30.0 | 0.95 |
| 525H-0 | 15.875 | 10.16 | 7.95 | 5.24 | 21.75 | 23.00 | 15.00 | 2.25 | 34.0 | 1.01 |
| 530H-0 | 15.875 | 10.16 | 9.40 | 5.24 | 24.90 | 26.20 | 15.00 | 2.42 | 37.0 | 1.19 |
| 630H-0 | 19.05 | 11.91 | 9.40 | 5.94 | 28.60 | 30.00 | 18.00 | 3.25 | 38.0 | 1.56 |

# Industrial O-Ring Chain

Quality Guaranteed

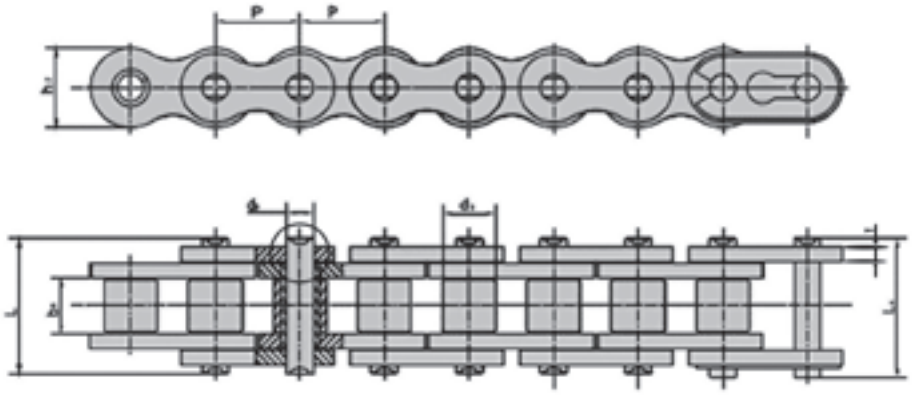

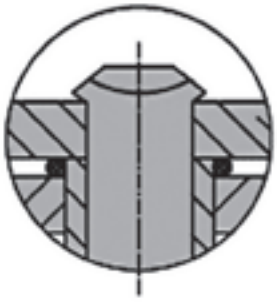

| Chain No. | Pitch | Roller Diameter | Width between inner plates | Pin Diameter | Pin Length | | Plate Dimensions | | Ultimate tensile Strength | |
|---|---|---|---|---|---|---|---|---|---|---|
| | P | d1 Max | b1 Min | d2 | L | Lc | h2 | t/T | Q Min | |
| | mm | mm | mm | mm | mm | mm | mm | mm | kN | Type |
| 40-0 | 12.7 | 7.92 | 7.85 | 3.96 | 19.55 | 20.65 | 12.0 | 1.5 | 13.8 | 0 |
| 50-0 | 15.875 | 10.16 | 9.40 | 5.08 | 23.30 | 24.5 | 15.0 | 2.03 | 21.8 | 0 |
| 60-0 | 19.05 | 11.91 | 12.57 | 5.94 | 28.65 | 30.5 | 18.0 | 2.42 | 31.1 | 0 |
| 80-0 | 25.40 | 15.88 | 15.75 | 7.92 | 35.85 | 39.0 | 24.0 | 3.25 | 55.6 | 0 |
| 08B1-0 | 12.7 | 7.92 | 7.85 | 3.96 | 17.8 | 19.1 | 11.8 | 1.6 | 18 | 0 |
| 10B1-0 | 10.16 | 7.4 | 9.4 | 5.08 | 20.8 | 22.4 | 14.7 | 1.7 | 22.4 | 0 |
| 12B1-0 | 19.05 | 12.07 | 11.68 | 5.72 | 23.6 | 25.3 | 16 | 1.85 | 29 | 0 |
| 16B1-0 | 25.4 | 15.88 | 17.02 | 8.28 | 38.1 | 40.6 | 21 | 3.1/4.1 | 60 | 0 |

# Agricultural Roller Chain

Quality Guaranteed

## 1. S Type

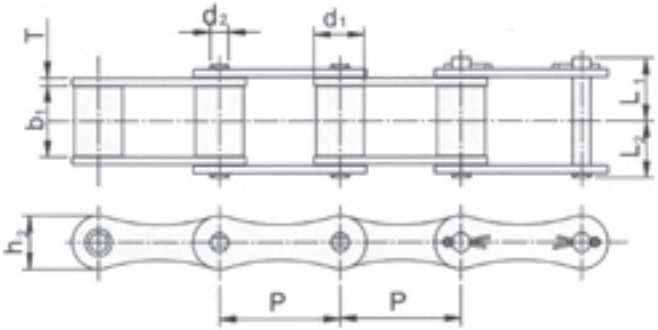

## 2. CA Type

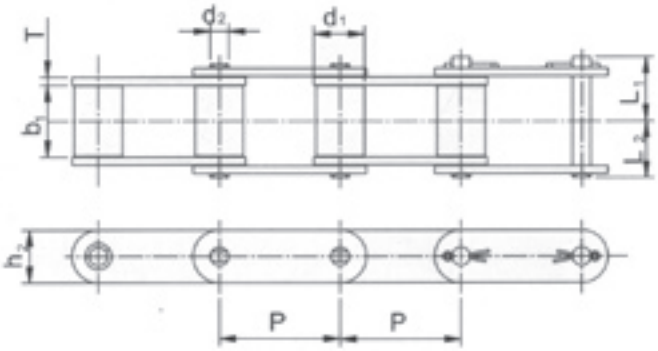


| Chain No. | Pitch | Roller diameter | Width between inter plates | Pin | | | Plate | | Ultimate tensile strength | Weight per meter |
|---|---|---|---|---|---|---|---|---|---|---|
| | P | $d_1$ | $b_1$ | $d_2$ | $L_1$ | $L_2$ | T | $h_2$ | Q(min) | q = |
| | mm | mm | mm | mm | mm | mm | mm | mm | kgf | kg/m |
| S32 | 29.21 | 11.43 | 15.9 | 4.44 | 14.45 | 13.05 | 1.5 | 12.8 | 900 | 0.75 |
| S42 | 34.93 | 14.27 | 19.1 | 7.00 | 19.05 | 16.85 | 2.5 | 19.0 | 3000 | 1.61 |
| S52 | 38.10 | 15.24 | 22.2 | 5.72 | 20.80 | 18.40 | 2.5 | 16.4 | 2000 | 1.57 |
| S55 | 41.40 | 17.78 | 22.2 | 5.72 | 20.80 | 18.40 | 2.5 | 16.6 | 2000 | 1.64 |
| S45 | 41.40 | 15.24 | 22.2 | 5.72 | 20.80 | 18.40 | 2.5 | 16.6 | 2000 | 1.44 |
| S62 | 41.91 | 19.05 | 25.4 | 5.72 | 20.75 | 20.05 | 2.5 | 16.8 | 2900 | 1.87 |
| S77 | 58.34 | 18.26 | 22.23 | 8.90 | 27.8 | 21.6 | 4.0 | 26.2 | 4590 | 2.65 |
| S88 | 66.27 | 22.86 | 28.58 | 8.90 | 28.1 | 24.9 | 4.0 | 26.2 | 4590 | 3.25 |
| CA550 | 41.40 | 16.80 | 20.2 | 7.15 | 20.85 | 17.35 | 2.7 | 20.0 | 5100 | 1.95 |
| CA557 | 41.4 | 17.79 | 20.2 | 6.0 | 22.2 | 18.7 | 3.2 | 23.1 | 5560 | 2.2 |
| CA620 | 42.01 | 17.68 | 25.0 | 7.15 | 24.15 | 21.05 | 3.2 | 20.0 | 5100 | 2.38 |

Quality Guaranteed

# Agricultural Roller Chain Attachments

Quality Guaranteed

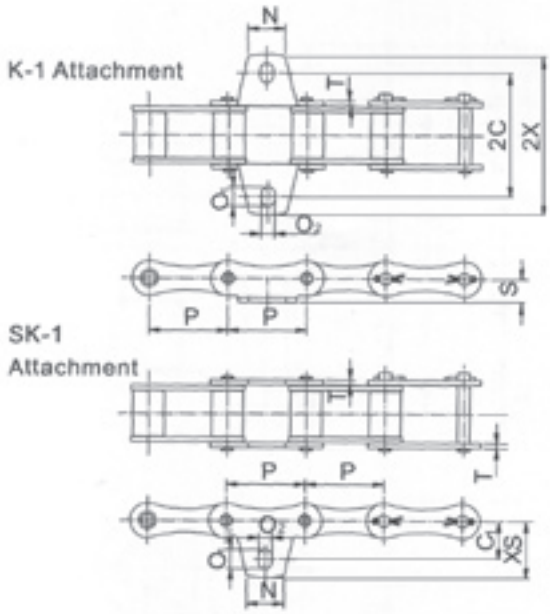

Roller link with A-1 Attachment

Roller link with K-1 Attachment

Pin link with A-1 Attachment

Pin link with K-1 Attachment

Roller link with SA-1 Attachment

Roller link with SK-1 Attachment

Pin link with SA-1 Attachment

Pin link with SK-1 Attachment

| Chain No. | Pitch | Attachment dimensions | | | | | | | | | Additional weight per A-Attachement kg/att |
|---|---|---|---|---|---|---|---|---|---|---|---|
| | P | 2C | $C_1$ | N | $O_1$ | $O_2$ | S | T | 2X | XS | $h_2$ |
| | mm | mm | mm | mm | mm | mm | mm | mm | mm | mm | mm |
| S32 | 29.21 | 42.86 | 17.3 | 17.0 | 6.80 | 5.2 | 8.6 | 1.5 | 59.9 | 25.9 | 0.003 |
| S42 | 34.93 | 54.00 | 23.6 | 23.6 | 10.10 | 6.9 | 14.0 | 2.5 | 75.0 | 34.2 | 0.013 |
| S52 | 38.10 | 58.70 | 22.1 | 16.0 | 8.50 | 6.9 | 11.4 | 2.5 | 76.5 | 30.8 | 0.010 |
| S55 | 41.40 | 54.00 | 19.8 | 22.0 | 10.10 | 6.9 | 11.4 | 2.5 | 74.0 | 29.9 | 0.012 |
| S45 | 41.40 | 54.00 | 19.8 | 22.0 | 10.10 | 6.9 | 11.4 | 2.5 | 74.0 | 29.9 | 0.010 |
| S62 | 41.91 | 66.70 | 24.6 | 24.0 | 13.20 | 6.9 | 11.4 | 2.5 | 95.3 | 38.6 | 0.011 |
| S77 | 58.3 | 76.2 | 38.1 | 21.5 | 11.5 | 8.3 | 20.8 | 4.0 | 101.6 | | |
| S88 | 66.3 | 96.9 | 48.4 | 27.0 | 9.9 | 8.3 | 20.8 | 4.0 | 119.4 | | |

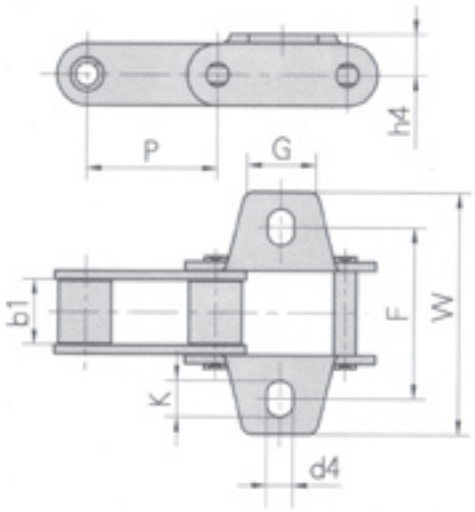


| Chain No. | P | $b_1$ | G | F | W | $h_4$ | $d_4$ | K |
|---|---|---|---|---|---|---|---|---|
| | mm | mm | mm | mm | mm | mm | mm | mm |
| CA550K1 | 41.4 | 19.81 | 22.0 | 52.5 | 76.2 | 12.7 | 8.3 | 10.0 |
| CA557K1 | 41.4 | 20.24 | 22.0 | 50.8 | 72.0 | 15.9 | 8.7 | 8.7 |

# Agricultural Roller Chain Attachments

Quality Guaranteed

**GB can source a wide range of standard and custom made attachments to suit standard roller and agricultural roller chain. Below are some examples of chain attachments and accessories available at highly competitive pricing ex-factory.**

# Pressed Steel Detachable Chain

Quality Guaranteed

**Transvision Steel Detachable Link Chains (or Pressed Steel Chains) manufactured to ASME B29.6 for agricultural, transport and similar machineries**

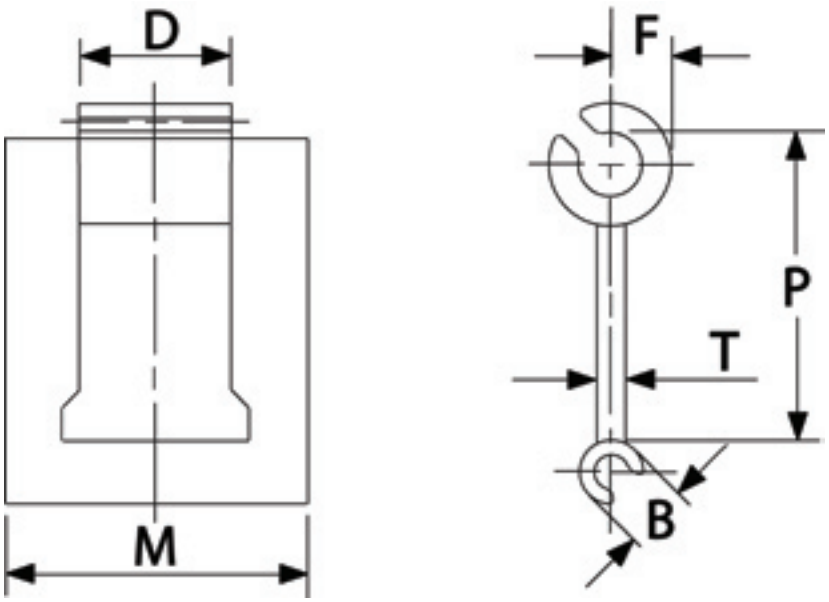


| Chain No. | P | F | D | B | M | T | U.T.S. (kN) |
|---|---|---|---|---|---|---|---|
| 25 | 22.91 | 4.83 | 11.12 | 4.57 | 17.56 | 1.6 | 3.38 |
| 32 | 29.31 | 6.1 | 15.49 | 5.84 | 23.61 | 2.03 | 5.87 |
| 42 | 34.93 | 7.49 | 20.32 | 6.73 | 30.95 | 2.41 | 7.47 |
| 51 | 29.34 | 6.1 | 18.29 | 6.89 | 27.79 | 2.29 | 7.47 |
| 52 | 38.25 | 8.13 | 21.84 | 7.7 | 35.71 | 2.79 | 9.61 |
| 55 | 41.42 | 8.51 | 20.65 | 8.13 | 32.54 | 2.92 | 9.96 |
| 62 | 40.01 | 9.02 | 25.45 | 8.51 | 39.09 | 3.51 | 15.66 |
| 67H | 58.65 | 12.7 | 28.19 | 11.38 | 47.62 | 4.44 | 19.57 |
| 67XH | 58.65 | 10.16 | 28.19 | 11.38 | 47.62 | 4.83 | 24.46 |
| 72 | 66.27 | 11.3 | 28.19 | 10.39 | 49.21 | 4.06 | 17.79 |

## Chain Puller

Chain Puller is an additional tool which permits fast and easy method for endless chain assembly. The two jaws are hooked into the ends of the chain, and the hand srew is turned ununtil the connecting link guides into position.

| Model | Chain Size | kg/set |
|---|---|---|
| No. 35 | 35 - 60 | 0.23 |
| No. 60 | 60 - 100 | 0.7 |
| No. 80 | 80 - 240 | 1.12 |

* Only available from overseas

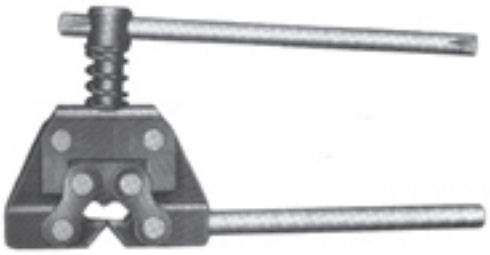

## Chain Detacher

Chain Detacher is a lightweight hand tool which quickly disaassembles roller chain without the need of a hammer, punch or vise. In short, “one tool does all the work”. There are three models for use with ANSI Standard Chain sizes No. 35 through No. 100.

| Model | Chain Size | kg/set |
|---|---|---|
| CB1 | 35 - 60 | 0.36 |
| CB2 | 60 - 100 | 1 |
| CB3 | 100-140 | 6 |

* Stocked locally

## Straight punch type Chain Cutter

Straight punch type Chain Cutter has much higher efficiency in quick disassembling for chains compared with the conventional chain cutter.

| Model | Chain Size | kg/set |
|---|---|---|
| No. 25 | 25 | 0.85 |
| No. 35 - 40 | 35 - 40 | 0.85 |
| No. 50 | 50 | 1.15 |
| No. 60 | 60 | 1.15 |
| No. 80 | 80 | 1.9 |
| No. 100 | 100 | 2.5 |

* Stocked locally

2×2

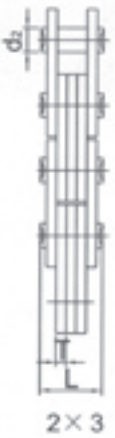


2×3

3×4

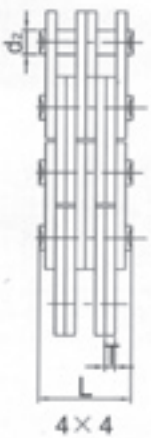


4×4

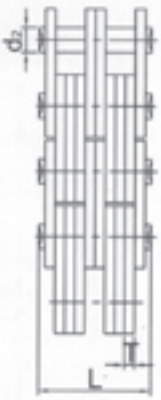


4×6

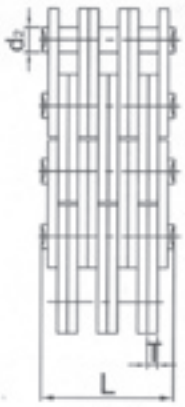


6×6

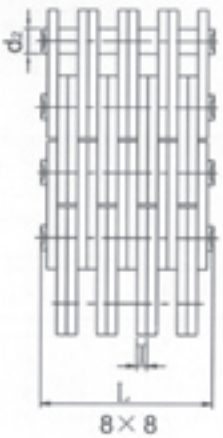


8×8

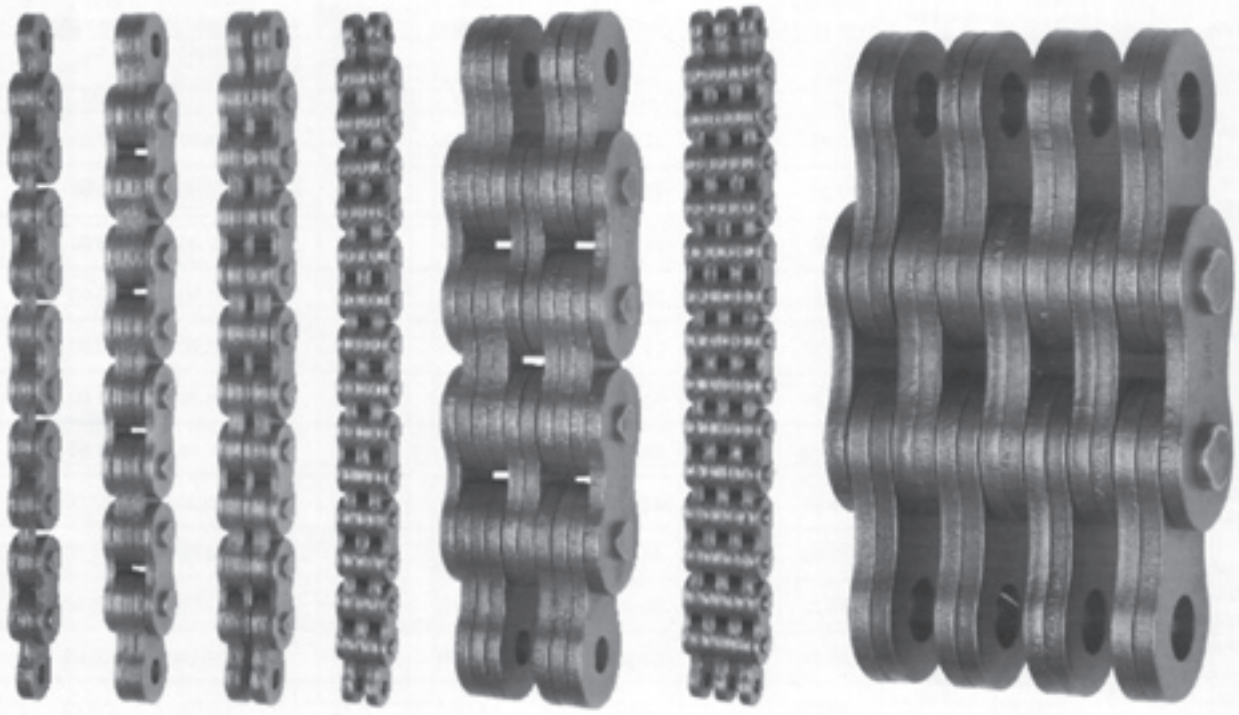

Quality Guaranteed

# American Standard
# AL Series Leaf Chain

Quality Guaranteed

| ANSI Chain No. | Pitch | Plates lacing | Plate depth | Plate thickness | Pin diameter | Pin Length | Ultimate tensile strength | Average tensile strength | Weight per meter |
|---|---|---|---|---|---|---|---|---|---|
| | P | | $h_2$ max | T | $d_2$ max | L max | Q min | $Q_0$ | q = |
| | mm | | mm | mm | mm | mm | mm | kN | kg/m |
| AL422 | 12.70 | 2 x 2 | 10.40 | 1.50 | 3.96 | 7.90 | 14.10 | 16.90 | 0.39 |
| AL444 | | 4 x 4 | | | | 14.40 | 28.20 | 35.20 | 0.74 |
| AL466 | | 6 x 6 | | | | 20.50 | 42.30 | 52.70 | 1.10 |
| AL522 | 15.88 | 2 x 2 | 12.80 | 2.06 | 5.08 | 10.30 | 22.00 | 27.50 | 0.61 |
| AL544 | | 4 x 4 | | | | 18.90 | 44.00 | 55.00 | 1.19 |
| AL566 | | 6 x 6 | | | | 26.90 | 66.00 | 82.50 | 1.79 |
| AL622 | 19.05 | 2 x 2 | 15.60 | 2.44 | 5.94 | 12.40 | 37.00 | 44.40 | 0.86 |
| AL644 | | 4 x 4 | | | | 22.70 | 64.00 | 76.80 | 1.69 |
| AL666 | | 6 x 6 | | | | 32.40 | 101.00 | 121.20 | 2.52 |
| AL822 | 25.40 | 2 x 2 | 20.50 | 3.26 | 7.92 | 16.00 | 56.70 | 68.60 | 1.54 |
| AL844 | | 4 x 4 | | | | 29.40 | 113.40 | 135.60 | 3.00 |
| AL866 | | 6 x 6 | | | | 42.50 | 170.00 | 202.30 | 4.46 |
| AL1022 | 31.75 | 2 x 2 | 25.60 | 4.00 | 9.53 | 19.60 | 88.50 | 107.10 | 2.37 |
| AL1044 | | 4 x 4 | | | | 35.90 | 177.00 | 203.60 | 4.68 |
| AL1066 | | 6 x 6 | | | | 52.30 | 265.00 | 315.80 | 7.00 |
| AL1222 | 38.10 | 2 x 2 | 30.50 | 4.80 | 11.10 | 24.30 | 127.00 | 151.10 | 3.65 |
| AL1244 | | 4 x 4 | | | | 43.80 | 254.00 | 299.70 | 7.05 |
| AL1266 | | 6 x 6 | | | | 63.00 | 381.00 | 426.30 | 10.44 |
| AL1422 | 44.45 | 2 x 2 | 36.40 | 5.65 | 12.70 | 28.07 | 151.23 | 182.37 | 4.79 |
| AL1444 | | 4 x 4 | | | | 51.30 | 372.70 | 413.60 | 10.34 |
| AL1466 | | 6 x 6 | | | | 74.56 | 559.00 | 620.40 | 15.16 |
| AL1622 | 50.80 | 2 x 2 | 41.60 | 6.45 | 14.27 | 32.94 | 191.26 | 231.13 | 5.98 |
| AL1644 | | 4 x 4 | | | | 58.06 | 471.00 | 522.80 | 12.98 |
| AL1666 | | 6 x 6 | | | | 84.46 | 706.00 | 783.60 | 19.41 |

Quality Guaranteed

# American Standard
# BL Series Leaf Chain

Quality Guaranteed

| ANSI Chain No. | Pitch | Plates lacing | Plate depth | Plate thickness | Pin diameter | Pin Length | Ultimate tensile strength | Average tensile strength | Weight per meter |
|---|---|---|---|---|---|---|---|---|---|
| | P | | $h_2$ max | T | $d_2$ max | L max | Q min | $Q_0$ | q = |
| | mm | | mm | mm | mm | mm | mm | kN | kg/m |
| BL422 | 12.70 | 2 x 2 | 12.07 | 2.08 | 5.09 | 11.05 | 22.20 | 27.60 | 0.64 |
| BL423 | | 2 x 3 | | | | 13.16 | 22.20 | 27.60 | 0.8 |
| BL434 | | 3 x 4 | | | | 17.40 | 33.40 | 41.40 | 1.12 |
| BL444 | | 4 x 4 | | | | 19.51 | 44.50 | 56.00 | 1.28 |
| BL446 | | 4 x 6 | | | | 23.75 | 44.50 | 56.00 | 1.60 |
| BL466 | | 6 x 6 | | | | 27.99 | 66.70 | 81.70 | 1.92 |
| BL488 | | 8 x 8 | | | | 36.45 | 89.00 | 109.40 | 2.56 |
| BL522 | 15.88 | 2 x 2 | 15.09 | 2.44 | 5.96 | 12.9 | 33.40 | 42.80 | 0.88 |
| BL523 | | 2 x 3 | | | | 15.37 | 33.40 | 42.80 | 1.10 |
| BL534 | | 3 x 4 | | | | 20.32 | 48.90 | 63.60 | 1.50 |
| BL544 | | 4 x 4 | | | | 22.78 | 66.70 | 84.50 | 1.80 |
| BL546 | | 4 x 6 | | | | 27.74 | 66.70 | 84.50 | 2.20 |
| BL566 | | 6 x 6 | | | | 32.69 | 100.10 | 125.10 | 2.65 |
| BL588 | | 8 x 8 | | | | 42.57 | 133.40 | 169.50 | 3.50 |
| BL622 | 19.05 | 2 x 2 | 18.11 | 3.30 | 7.94 | 17.37 | 48.90 | 63.60 | 1.45 |
| BL623 | | 2 x 3 | | | | 20.73 | 48.90 | 63.60 | 1.80 |
| BL634 | | 3 x 4 | | | | 27.43 | 75.60 | 102.60 | 2.50 |
| BL644 | | 4 x 4 | | | | 30.78 | 97.90 | 122.30 | 2.90 |
| BL646 | | 4 x 6 | | | | 37.49 | 97.90 | 122.30 | 3.60 |
| BL666 | | 6 x 6 | | | | 44.20 | 146.80 | 190.80 | 4.30 |
| BL688 | | 8 x 8 | | | | 57.61 | 195.70 | 238.80 | 5.80 |
| BL822 | 25.40 | 2 x 2 | 24.13 | 4.09 | 9.54 | 21.34 | 84.50 | 108.20 | 2.20 |
| BL823 | | 2 x 3 | | | | 25.48 | 84.50 | 108.20 | 2.70 |
| BL834 | | 3 x 4 | | | | 33.76 | 129.00 | 143.60 | 3.80 |
| BL844 | | 4 x 4 | | | | 37.90 | 169.00 | 214.60 | 4.30 |
| BL846 | | 4 x 6 | | | | 46.18 | 169.00 | 214.60 | 5.40 |
| BL866 | | 6 x 6 | | | | 54.46 | 253.60 | 324.50 | 6.50 |
| BL888 | | 8 x 8 | | | | 71.02 | 338.10 | 432.70 | 8.60 |
| BL1022 | 31.75 | 2 x 2 | 30.18 | 4.90 | 11.11 | 25.37 | 115.60 | 146.80 | 3.40 |
| BL1023 | | 2 x 3 | | | | 30.33 | 115.60 | 146.80 | 4.30 |
| BL1034 | | 3 x 4 | | | | 40.23 | 182.40 | 231.60 | 6.00 |
| BL1044 | | 4 x 4 | | | | 45.19 | 231.30 | 291.40 | 6.90 |
| BL1046 | | 4 x 6 | | | | 55.09 | 231.30 | 291.40 | 8.60 |
| BL1066 | | 6 x 6 | | | | 65.00 | 347.00 | 430.30 | 10.30 |
| BL1088 | | 8 x 8 | | | | 84.81 | 462.60 | 555.10 | 13.80 |

Quality Guaranteed

# American Standard
# BL Series Leaf Chain

Quality Guaranteed

| ANSI Chain No. | Pitch | Plates lacing | Plate depth | Plate thickness | Pin diameter | Pin Length | Ultimate tensile strength | Average tensile strength | Weight per meter |
|---|---|---|---|---|---|---|---|---|---|
| | P | | $h_2$ max | T | $d_2$ max | L max | Q min | $Q_0$ | q = |
| | mm | | mm | mm | mm | mm | mm | kN | kg/m |
| BL1222 | 38.10 | 2 x 2 | 36.20 | 5.77 | 12.71 | 29.62 | 151.20 | 192.00 | 4.60 |
| BL1223 | | 2 x 3 | | | | 35.43 | 151.20 | 192.00 | 5.80 |
| BL1234 | | 3 x 4 | | | | 47.07 | 244.60 | 308.10 | 8.10 |
| BL1244 | | 4 x 4 | | | | 52.88 | 302.50 | 381.10 | 9.30 |
| BL1246 | | 4 x 6 | | | | 64.52 | 302.50 | 381.10 | 11.60 |
| BL1266 | | 6 x 6 | | | | 76.15 | 453.70 | 543.60 | 13.90 |
| BL1288 | | 8 x 8 | | | | 99.42 | 605.0 | 726.00 | 18.60 |
| BL1422 | 44.45 | 2 x 2 | 42.24 | 6.55 | 14.29 | 33.55 | 191.30 | 225.70 | 6.10 |
| BL1423 | | 2 x 3 | | | | 40.16 | 191.30 | 225.70 | 7.60 |
| BL1434 | | 3 x 4 | | | | 53.37 | 315.80 | 372.60 | 10.60 |
| BL1444 | | 4 x 4 | | | | 59.97 | 382.60 | 451.20 | 12.20 |
| BL1446 | | 4 x 6 | | | | 73.18 | 382.60 | 451.20 | 15.20 |
| BL1466 | | 6 x 6 | | | | 86.39 | 578.30 | 682.40 | 18.20 |
| BL1488 | | 8 x 8 | | | | 112.8 | 765.10 | 902.80 | 24.30 |
| BL1622 | 50.80 | 2 x 2 | 48.26 | 7.52 | 17.46 | 39.01 | 289.10 | 341.10 | 8.00 |
| BL1623 | | 2 x 3 | | | | 46.58 | 289.10 | 341.10 | 10.00 |
| BL1634 | | 3 x 4 | | | | 61.72 | 440.40 | 519.60 | 14.00 |
| BL1644 | | 4 x 4 | | | | 69.29 | 578.30 | 680.40 | 16.00 |
| BL1646 | | 4 x 6 | | | | 84.43 | 578.30 | 684.40 | 20.00 |
| BL1666 | | 6 x 6 | | | | 99.57 | 857.40 | 1000.70 | 24.00 |
| BL1688 | | 8 x 8 | | | | 129.84 | 1156.50 | 1364.60 | 32.00 |
| BL2022 | 63.50 | 2 x 2 | 60.33 | 9.91 | 23.81 | 51.74 | 433.70 | 511.70 | 15.80 |
| BL2023 | | 2 x 3 | | | | 61.70 | 433.70 | 511.70 | 19.80 |
| BL2034 | | 3 x 4 | | | | 81.61 | 649.40 | 766.20 | 27.70 |
| BL2044 | | 4 x 4 | | | | 91.57 | 867.40 | 1023.50 | 31.60 |
| BL2046 | | 4 x 6 | | | | 111.48 | 867.40 | 1023.50 | 39.50 |
| BL2066 | | 6 x 6 | | | | 131.39 | 1301.10 | 1535.20 | 47.40 |
| BL2088 | | 8 x 8 | | | | 171.22 | 1734.80 | 2046.50 | 63.20 |

Quality Guaranteed

# European Standard Leaf Chains DIN

Quality Guaranteed

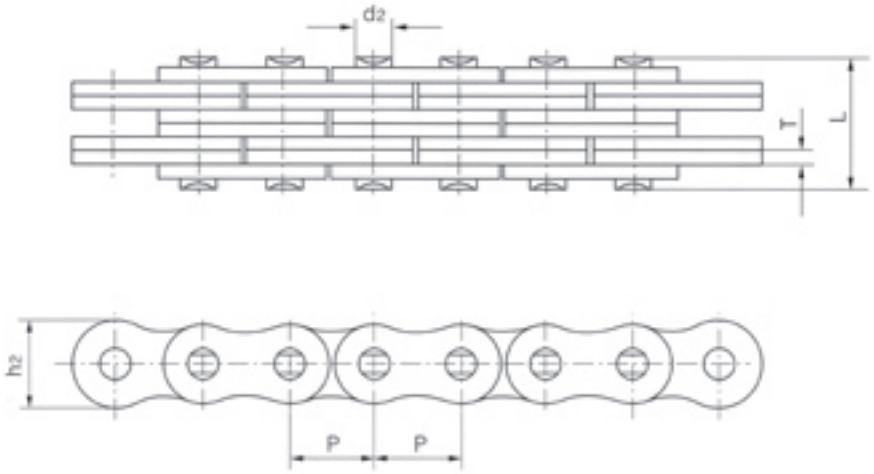


Plates Lacing

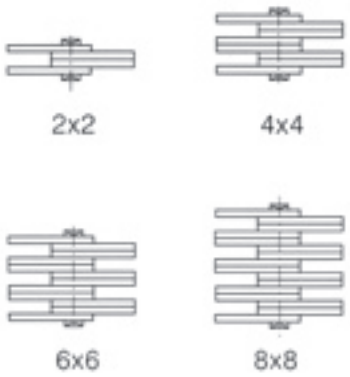


| Chain No. | Pitch | Chain Lacing | Plate depth | Plate Thickness | Pin Diameter | Pin Length | Ultimate tensile strength | Average tensile strength | Weight per meter |
|---|---|---|---|---|---|---|---|---|---|
| | p | | h2 max | T max | d2 max | L max | Q min | Q0 | q |
| | mm | | mm | mm | mm | mm | KN | KN | Kg/m |
| LL0822 | 12.700 | 2X2 | 10.60 | 1.30 | 4.45 | 7.6 | 17.8 | 20.4 | 0.35 |
| LL0844 | | 4X4 | | | | 15.6 | 36.4 | 40.7 | 0.84 |
| LL0866 | | 6X6 | | | | 18.2 | 44.5 | 50.9 | 1.00 |
| LL0888 | | 8X8 | | | | 23.5 | 62.2 | 71.2 | 1.33 |
| LL1022 | 15.875 | 2X2 | 13.70 | 1.60 | 5.08 | 9.2 | 22.3 | 25.5 | 0.54 |
| LL1044 | | 4X4 | | | | 15.8 | 44.5 | 51.0 | 1.06 |
| LL1066 | | 6X6 | | | | 22.1 | 66.7 | 76.3 | 1.57 |
| LL1088 | | 8X8 | | | | 28.8 | 89.0 | 101.9 | 2.10 |
| LL1222 | 19.050 | 2X2 | 15.00 | 1.85 | 5.72 | 10.4 | 28.9 | 33.2 | 0.73 |
| LL1244 | | 4X4 | | | | 17.9 | 57.8 | 66.4 | 1.44 |
| LL1266 | | 6X6 | | | | 25.4 | 86.7 | 99.7 | 2.15 |
| LL1288 | | 8X8 | | | | 32.9 | 115.6 | 132.9 | 2.84 |

Quality Guaranteed

# European Standard Leaf Chains DIN

Quality Guaranteed

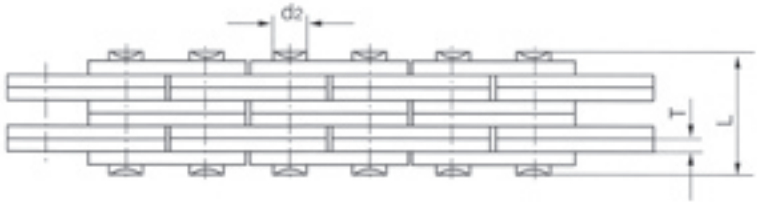


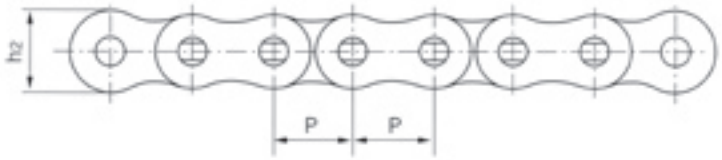


Plates Lacing

| Chain No. | Pitch | Chain Lacing | Plate depth | Plate Thickness | Pin Diameter | Pin Length | Ultimate tensile strength | Average tensile strength | Weight per meter |
|---|---|---|---|---|---|---|---|---|---|
| | p | | h2 max | T max | d2 max | L max | Q min | Q0 | q |
| | mm | | mm | mm | mm | mm | KN | KN | Kg/m |
| LL1622 | 25.400 | 2X2 | 21.00 | 3.10 | 8.28 | 17.2 | 58.0 | 66.7 | 1.52 |
| LL1644 | | 4X4 | | | | 29.6 | 116.0 | 140.0 | 2.90 |
| LL1666 | | 6X6 | | | | 42.4 | 174.0 | 208.8 | 4.30 |
| LL1688 | | 8X8 | | | | 55.4 | 232.0 | 278.0 | 5.71 |
| LL2022 | 31.750 | 2X2 | 26.40 | 3.70 | 10.09 | 20.1 | 95.0 | 109.2 | 2.33 |
| LL2044 | | 4X4 | | | | 35.4 | 190.0 | 218.5 | 4.40 |
| LL2066 | | 6X6 | | | | 50.1 | 285.0 | 324.6 | 6.79 |
| LL2088 | | 8X8 | | | | 65.1 | 380.0 | 435.1 | 8.90 |
| LL2422 | 38.100 | 2X2 | 33.20 | 5.00 | 14.63 | 28.4 | 170.0 | 195.5 | 4.47 |
| LL2444 | | 4X4 | | | | 46.3 | 340.0 | 380.8 | 8.22 |
| LL2466 | | 6X6 | | | | 66.4 | 510.0 | 571.2 | 12.22 |
| LL2488 | | 8X8 | | | | 86.6 | 680.0 | 775.2 | 16.30 |
| LL2822 | 44.450 | 2X2 | 37.08 | 6.00 | 15.90 | 32.2 | 200.0 | 224.0 | 5.10 |
| LL2844 | | 4X4 | | | | 56.4 | 400.0 | 448.0 | 9.90 |
| LL2866 | | 6X6 | | | | 80.8 | 600.0 | 672.0 | 14.60 |
| LL2888 | | 8X8 | | | | 105.2 | 800.0 | 896.0 | 19.40 |
| LL3222 | 50.800 | 2X2 | 42.00 | 6.00 | 17.81 | 33.2 | 260.0 | 291.2 | 5.80 |
| LL3244 | | 4X4 | | | | 56.6 | 520.0 | 582.4 | 12.30 |
| LL3266 | | 6X6 | | | | 80.8 | 780.0 | 873.6 | 18.30 |
| LL3288 | | 8X8 | | | | 105.0 | 1050.0 | 1176.0 | 24.00 |
| LL4022 | 63.500 | 2X2 | 52.76 | 8.25 | 22.89 | 44.7 | 360.0 | 403.2 | 10.30 |
| LL4044 | | 4X4 | | | | 77.9 | 780.0 | 873.6 | 20.00 |
| LL4066 | | 6X6 | | | | 111.1 | 1080.0 | 1209.6 | 30.00 |
| LL4088 | | 8X8 | | | | 145.5 | 1560.0 | 1747.2 | 39.10 |
| LL4822 | 76.200 | 2X2 | 63.88 | 10.30 | 29.24 | 56.1 | 560.0 | 627.2 | 18.50 |
| LL4844 | | 4X4 | | | | 97.4 | 1120.0 | 1254.4 | 35.70 |
| LL4866 | | 6X6 | | | | 138.9 | 1680.0 | 1881.6 | 53.00 |
| LL4888 | | 8X8 | | | | 182.4 | 2240.0 | 2508.8 | 70.40 |

# Trencher Chains

Quality Guaranteed

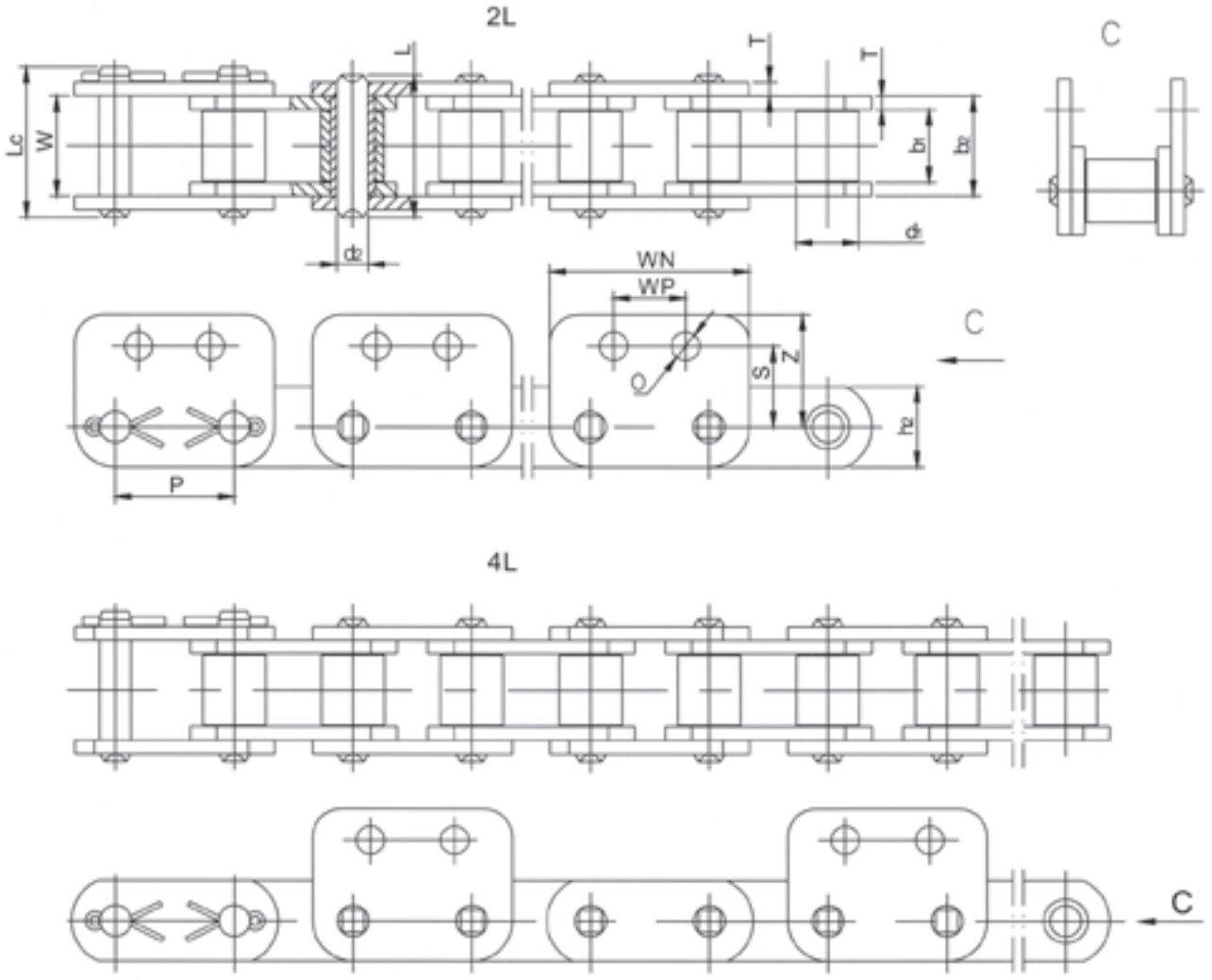


| Chain No. | Pitch | Dimension Chart | | | | | | | | | | | | | | Average tensile strength | Weight per meter |
|---|---|---|---|---|---|---|---|---|---|---|---|---|---|---|---|---|---|
| | P | d1 max | d2 max | b1 min | b2 max | W min | h2 max | L max | Lc max | T | O | WN | WP | S | Z | Qo kN | q kg/m |
| 4210-2L | 42.01 | 22.23 | 11.1 | 25.5 | 35.3 | 35.4 | 28.6 | 50.25 | 52.85 | 4.8 | 10 | 70.6 | 46.04 | 28.6 | 39.7 | 102.3 | 6.8 |
| 4210-4L | | | | | | | | | | | | | | | | | 6.09 |
| 4210H-2L | 42.01 | 22.23 | 11.1 | 25.5 | 35.3 | 35.4 | 31.6 | 53.4 | 57.5 | 4.8 | 10 | 73.6 | 46.04 | 30.0 | 41.0 | 102.3 | 6.8 |
| 4210H-4L | | | | | | | | | | | | | | | | | 6.09 |
| 5019-2L | 50.8 | 28.58 | 14.27 | 32.05 | 45.15 | 45.25 | 38.1 | 64.8 | 69.5 | 6.45 | 13.5 | 93 | 50.8 | 38.1 | 56.65 | 134.4 | 13.21 |
| 5019-4L | | | | | | | | | | | | | | | | | 11.47 |

# Steel Pintel Chains

Quality Guaranteed

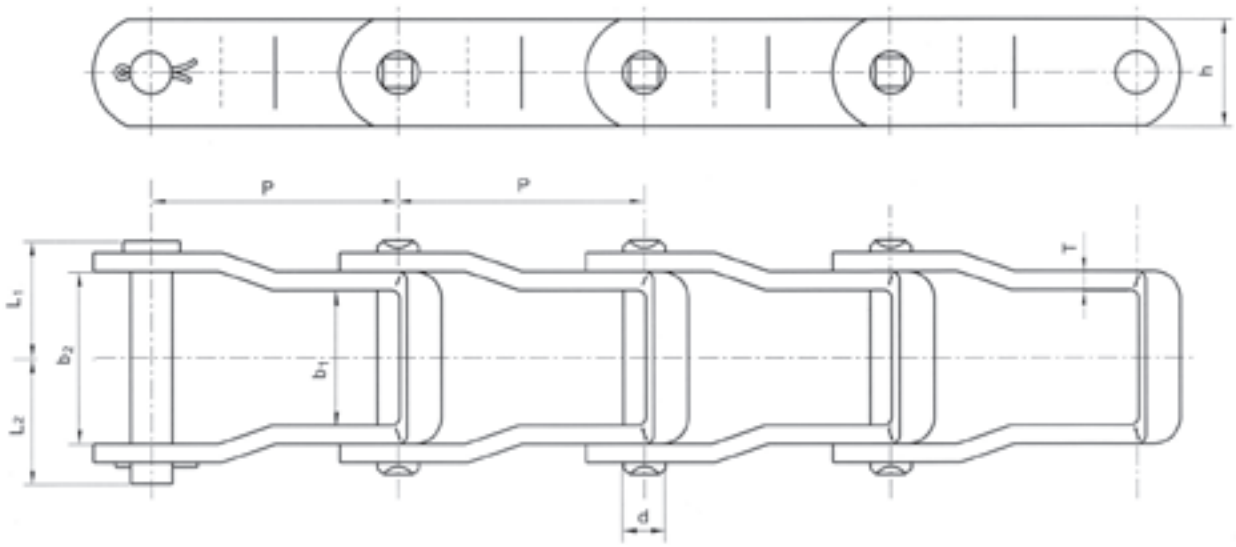


| Chain No. | Pitch | Pin diameter | Width between inner plates | Pin Length | | Inner plate depth | Plate thickness | Ultimate tensile strength | Weight per meter |
|---|---|---|---|---|---|---|---|---|---|
| | P | d2 max | b1 min | L max | L1 max | h2 max | T | Q min | q |
| | mm | mm | mm | mm | mm | mm | mm | KN | Kg/m |
| 205 | 31.75 | 5.08 | 9.80 | 21.20 | 24.20 | 12.20 | 2.06 | 12.50 | 0.64 |
| 662 | 42.27 | 7.15 | 23.2 | 40.35 | 44.00 | 18.30 | 3.20 | 37.80 | 1.71 |
| 667H | 58.75 | 7.92 | 25.6 | 43.05 | 47.00 | 22.23 | 3.20 | 42.30 | 1.85 |
| 667J | 57.15 | 9.53 | 27.00 | 49.65 | 54.50 | 23.80 | 4.30 | 62.28 | 2.27 |
| 667K | 57.15 | 11.1 | 27.80 | 54.50 | 58.85 | 26.80 | 5.10 | 89.00 | 3.88 |
| 667X | 57.15 | 11.1 | 27.00 | 50.00 | 54.80 | 23.80 | 4.30 | 66.70 | 2.96 |
| 88K | 66.27 | 11.1 | 27.80 | 54.50 | 58.85 | 26.80 | 5.10 | 89.00 | 3.64 |
| 667XH | 57.15 | 11.9 | 27.80 | 57.40 | 61.25 | 26.80 | 5.70 | 124.6 | 4.44 |

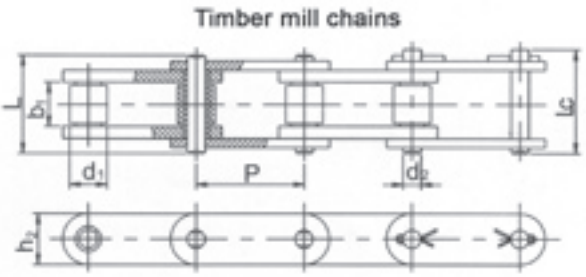

| Chain No. | Pitch | Roller diameter | Width between inner plates | Pin diameter | Pin length | | Inner plate depth | Ultimate tensile strength | Average tensile strength | Weight per meter |
|---|---|---|---|---|---|---|---|---|---|---|
| | P | $d_1$ max | $b_1$ min | $d_2$ max | L max | Lc max | $h_2$ max | Q min | $Q_0$ | q = |
| | mm | mm | mm | mm | mm | mm | mm | mm | kN | kg/m |
| 81X | 66.27 | 23.0 | 26.97 | 11.10 | 49.0 | 51.81 | 28.90 | 106.7 | 129.0 | 3.78 |
| 81XH | 66.27 | 23.0 | 26.97 | 11.10 | 60.1 | 63.4 | 31.35 | 151.9 | 175.7 | 5.88 |
| 81XHH | 66.27 | 23.0 | 26.97 | 11.10 | 65.6 | 68 | 32.26 | 191.1 | 212.6 | 6.70 |

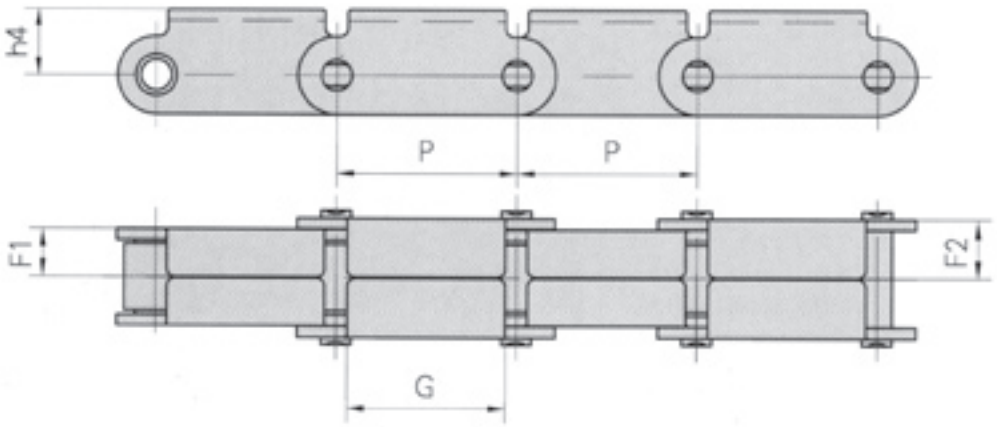


| Chain No. | P | F1 | F2 | G | h4 |
|---|---|---|---|---|---|
| | mm | mm | mm | mm | mm |
| 81XF1(RT) | 66.27 | 17.5 | 21.8 | 58.0 | 23.85 |

# Malleable Cast Iron Chains

Quality Guaranteed

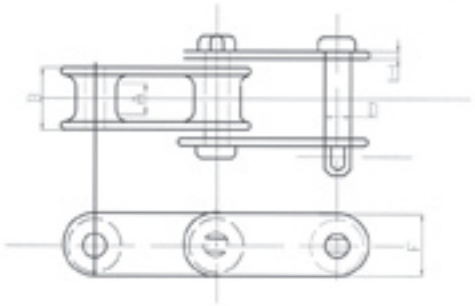

| Chain No. | Average Pitch | | MAX.Allow Load Lbs | AVG.UT Strength Lbs | Nos. of Chain Per 10 feet | Average Weight kglft | Dimensions (mm) | | | | |
|---|---|---|---|---|---|---|---|---|---|---|---|
| | in. | mm | | | | | A | B | D | F | T |
| C55 | 1.631 | 41.4274 | 1110 | 9000 | 74 | 0.97 | 17.5 | 32 | 9.5 | 19 | 4.8 |
| C55L | 1.631 | 41.4274 | 1110 | 9000 | 74 | 1.25 | 17.5 | 32 | 10 | 19 | 4.8 |
| C77 | 2.308 | 58.6232 | 1360 | 11000 | 52 | 1.03 | 17.5 | 32 | 11.1 | 22 | 4.8 |
| C188 | 2.609 | 66.2686 | 1950 | 14000 | 46 | 1.60 | 23.8 | 39.6 | 12.7 | 29 | 5.8 |
| C188L | 2.609 | 66.2686 | 1950 | 14000 | 46 | 1.60 | 23.8 | 39.6 | 14.3 | 29 | 5.8 |
| C102B | 4.000 | 101.6 | 4000 | 24000 | 30 | 2.85 | 50.8 | 73 | 16 | 38 | 9.0 |
| C111 | 4.760 | 120.904 | 5950 | 36000 | 26 | 5.60 | 60 | 86 | 19 | 44 | 9.0 |
| C131 | 3.075 | 78.105 | 3220 | 24000 | 40 | 3.30 | 28.5 | 52 | 16 | 38 | 9.0 |
| C132 | 6.000 | 152.4 | 8330 | 50000 | 20 | 6.57 | 73 | 111 | 25.4 | 50.8 | 12 |

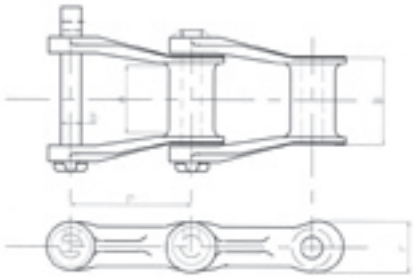

| Chain No. | Average Pitch | | MAX.Allow Load Lbs | AVG.UT Strength Lbs | Nos. of Chain Per 10 feet | Average Weight kglft | Dimensions (mm) | | | |
|---|---|---|---|---|---|---|---|---|---|---|
| | in. | mm | | | | | A | B | D | F |
| 462 | 1.634 | 41.5036 | 1400 | 9000 | 73 | 1.19 | 22 | 36.5 | 11.1 | 22 |
| 477 | 2.308 | 58.6232 | 1200 | 9600 | 52 | 1.03 | 17.5 | 32 | 11.1 | 25.4 |
| 488 | 2.609 | 66.2686 | 1600 | 11000 | 46 | 1.33 | 24 | 41 | 11.1 | 24 |
| 4103 | 3.075 | 78.105 | 3200 | 22000 | 39 | 2.59 | 28.5 | 47.6 | 19 | 38 |
| 720 | 6.000 | 152.4 | 3200 | 22000 | 20 | 1.90 | 28.5 | 47.6 | 17.5 | 38 |
| 720S | 6.000 | 152.4 | 3300 | 29000 | 20 | 2.35 | 28.5 | 47.6 | 19 | 38 |
| 730 | 6.000 | 152.4 | 3500 | 30000 | 20 | 3.0 | 28.5 | 50 | 19 | 44 |

Quality Guaranteed

# Malleable Cast Iron Chains

Quality Guaranteed

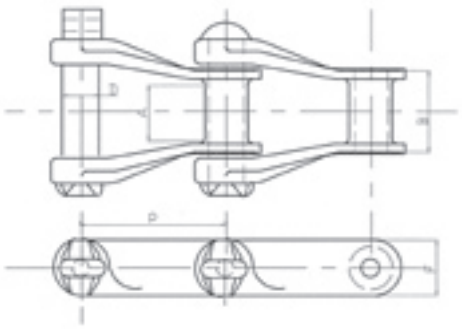

| Chain No. | Average Pitch | | MAX. Allow Load Lbs | AVG.UT Strength Lbs | Nos. of Chain Per 10 Feet | Average Weight kglft | Dimensions (mm) | | | |
|---|---|---|---|---|---|---|---|---|---|---|
| | in. | mm | | | | | A | B | D | F |
| H60 | 2.308 | 58.6232 | 1170 | 7000 | 52 | 0.96 | 19 | 38 | 8 | 19 |
| H78 | 2.609 | 66.2686 | 2100 | 12600 | 46 | 1.84 | 28.5 | 76.7 | 12.7 | 28.5 |
| H82 | 3.075 | 78.105 | 2700 | 17000 | 39 | 2.45 | 32 | 55 | 14 | 32 |
| H110 | 6.000 | 152.4 | 4200 | 24500 | 20 | 5.90 | 235 | 270 | 19 | 38 |

H78A

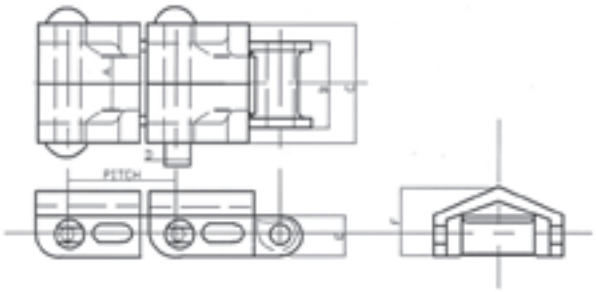

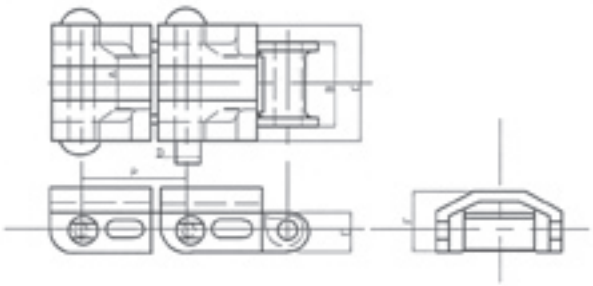

H78B

| Chain No. | Style | Average Pitch | | MAX. Allow Load Lbs | AVG.UT Strength Lbs | Nos. of Chain Per 10 feet | Average Weight kglft | Dimensions (mm) | | | | | |
|---|---|---|---|---|---|---|---|---|---|---|---|---|---|
| | | in. | mm | | | | | A | B | C | D | E | F |
| H78A | A | 2.609 | 66.2686 | 2200 | 12600 | 46 | 2.72 | 28.6 | 47 | 71 | 12.7 | 25.4 | 43 |
| H78B | B | 2.609 | 66.2686 | 2200 | 12600 | 46 | 2.85 | 28.6 | 47 | 71 | 12.7 | 25.4 | 43 |
| H130 | A | 4.000 | 101.6 | 2500 | 15000 | 30 | 2.52 | 25.4 | 43 | 71 | 12.7 | 25.4 | 43 |
| H138 | B | 4.000 | 101.6 | 2500 | 15000 | 30 | 2.67 | 25.4 | 43 | 71 | 12.7 | 25.4 | 43 |

# Offset Sidebar Welded Steel Chain

Quality Guaranteed

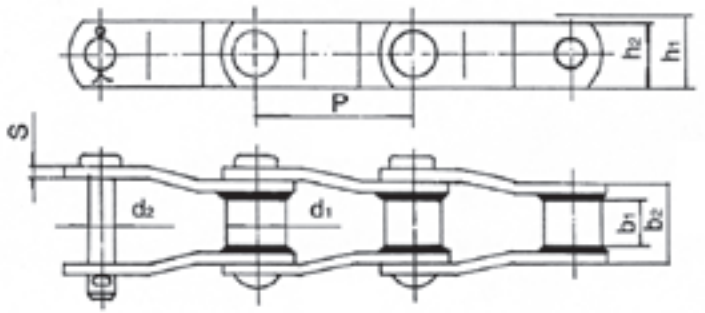


| | Pitch | Outside Barrel dia. | Pin dia. | Side Bar Height | Approx. Tooth face at Pitch Line | Length of Bearing | Plate Thickness | Breaking Load | Weight Approx. |
|---|---|---|---|---|---|---|---|---|---|
| | p | d1 (max) | d2(max) | h2(max) | b1(max) | b2(max) | S(max) | Q | q |
| Chain No. | mm | mm | mm | mm | | mm | mm | KN | Kg/FT |
| WR78 | 66.27 | 22.23 | 12.70 | 28.40 | 31.75 | 51.00 | 6.40 | 93.4 | 1.9 |
| WH78 | 66.27 | 22.23 | 12.70 | 28.40 | 31.75 | 51.00 | 6.40 | 146 | 1.9 |
| WR82 | 78.10 | 26.97 | 14.35 | 31.80 | 38.10 | 57.40 | 6.40 | 100.1 | 2.28 |
| WH82 | 78.10 | 26.97 | 14.35 | 31.80 | 38.10 | 57.40 | 6.40 | 132 | 2.28 |
| WR124 | 101.60 | 31.75 | 19.05 | 38.10 | 41.28 | 70.30 | 9.70 | 169.0 | 3.62 |
| WH124 | 101.60 | 31.75 | 19.05 | 38.10 | 41.28 | 70.30 | 9.70 | 307 | 3.62 |
| WR111 | 120.90 | 31.75 | 19.05 | 44.45 | 57.15 | 86.20 | 9.70 | 169.0 | 4.17 |
| WH111 | 120.90 | 31.75 | 19.05 | 44.45 | 57.15 | 86.20 | 9.70 | 266.7 | 4.17 |
| WR106 | 152.40 | 31.75 | 19.05 | 38.10 | 38.10 | 69.85 | 9.70 | 169.0 | 3.0 |
| WH106 | 152.40 | 31.75 | 19.05 | 38.10 | 38.10 | 69.85 | 9.70 | 250 | 3.0 |
| WR110 | 152.40 | 31.75 | 19.05 | 38.10 | 38.10 | 69.85 | 9.70 | 169.0 | 3.0 |
| WH110 | 152.40 | 31.75 | 19.05 | 38.10 | 38.10 | 69.85 | 9.70 | 250 | 3.0 |
| WR132 | 153.67 | 44.45 | 25.40 | 50.80 | 73.00 | 111.0 | 12.70 | 275.8 | 6.43 |
| WH132 | 153.67 | 44.45 | 25.40 | 50.80 | 73.00 | 111.0 | 12.70 | 511 | 6.43 |
| WR150 | 153.67 | 44.45 | 25.4 | 63.50 | 73.0 | 111.0 | 12.70 | 620 | 7.74 |
| WH150 | 153.67 | 44.45 | 25.4 | 63.50 | 73.0 | 111.0 | 12.70 | 620 | 7.74 |
| WR155 | 153.67 | 44.45 | 28.57 | 63.50 | 73.0 | 117.48 | 15.88 | 820 | 9.0 |
| WH155 | 153.67 | 44.45 | 28.57 | 63.50 | 73.0 | 117.48 | 15.88 | 820 | 9.0 |
| WR157 | 153.67 | 44.45 | 28.57 | 63.50 | 76.2 | 117.48 | 15.88 | 820 | 9.1 |
| WH157 | 153.67 | 44.45 | 28.57 | 63.50 | 76.2 | 117.48 | 15.88 | 820 | 9.1 |

Quality Guaranteed

# Straight Sidebar Welded Steel Chain

Quality Guaranteed

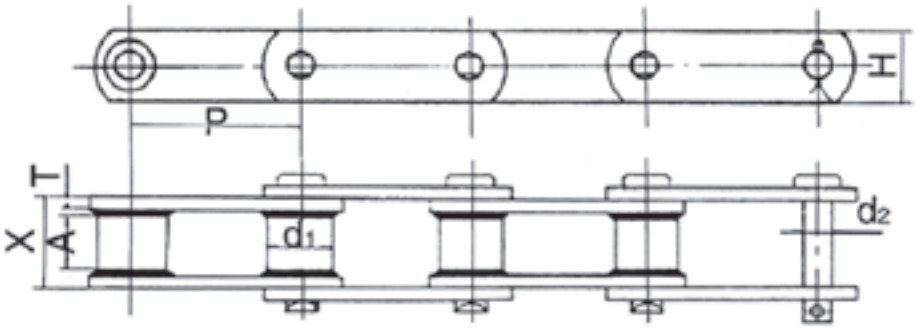


| Chain No. | Pitch | Outside Barrel dia | Pin dia | Length of Bearing | Approx. Tooth Face at Pitch Line | Side Bar Height | Plate Thickness | Breaking Load | Weight Approx |
|---|---|---|---|---|---|---|---|---|---|
| | P | d1 (max) | d2 (max) | X (min) | A (max) | H (max) | T (max) | Q | q |
| | mm | mm | mm | mm | mm | mm | mm | KN | Kg/FT |
| WRC-131 | 78.10 | 31.75 | 19.05 | 57.15 | 28.58 | 38.10 | 9.70 | 224 | 3.83 |
| WHC-131 | 78.10 | 31.75 | 19.05 | 57.15 | 28.58 | 38.10 | 9.70 | 255 | 3.60 |
| WRC-124 | 101.60 | 32.00 | 19.05 | 71.00 | 43.00 | 40.00 | 10.00 | 225 | 4.13 |
| WRC-111 | 120.90 | 31.75 | 19.05 | 86.20 | 57.15 | 44.45 | 9.70 | 224 | 3.20 |

Quality Guaranteed

# Extra Heavy Duty Welded Steel Chain

Quality Guaranteed

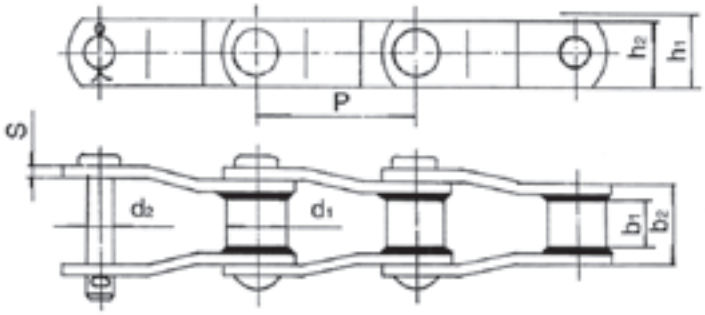


| Chain No. | Pitch | Outside Barrel dia | Pin dia. | Side Bar Height | Approx. Tooth Face at Pitch Line | Length of Bearing | Plate Thickness | Breaking Load | Weight Approx. |
|---|---|---|---|---|---|---|---|---|---|
| | P | d1 (max) | d2 (max) | h2 (max) | b1 (max) | b2 (max) | S (max) | Q | q |
| | mm | mm | mm | mm | mm | mm | mm | KN | Kg/FT |
| WR78XHD | 66.95 | 25.4 | 14.29 | 31.75 | 25.4 | 50.8 | 9.5 | 133 | 2.82 |
| WH78XHD | 66.95 | 25.4 | 14.29 | 31.75 | 25.4 | 50.8 | 9.5 | 160 | 2.82 |
| WR82XHD | 78.1 | 31.75 | 19.05 | 38.1 | 28.6 | 60.9 | 9.7 | 144.8 | 3.85 |
| WH82XHD | 78.1 | 31.75 | 19.05 | 38.1 | 28.6 | 60.9 | 9.7 | 253 | 3.85 |
| WR124XHD | 103.2 | 44.45 | 25.4 | 50.8 | 38.1 | 76.2 | 12.7 | 378 | 6.73 |
| WH124XHD | 103.2 | 44.45 | 25.4 | 50.8 | 38.1 | 76.2 | 12.7 | 542 | 6.73 |
| WR106XHD | 153.67 | 44.45 | 25.4 | 50.8 | 38.1 | 76.2 | 12.7 | 378 | 5.52 |
| WH106XHD | 153.67 | 44.45 | 25.4 | 50.8 | 38.1 | 76.2 | 12.7 | 542 | 5.52 |
| WR132XHD | 153.67 | 44.45 | 25.4 | 50.8 | 76.2 | 118.6 | 15.88 | 534 | 7.49 |
| WH132XHD | 153.67 | 44.45 | 25.4 | 50.8 | 76.2 | 118.6 | 15.88 | 543 | 7.49 |

Quality Guaranteed

# Straight Sidebar Welded Steel Chain

Quality Guaranteed

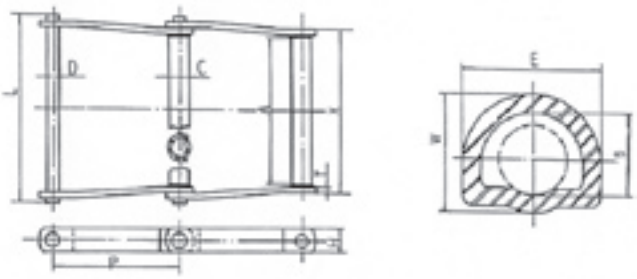


| Chain No. | Pitch | Outside Barrel dia | Side Bar Height | Plate Thickness | Maximun Sprocket Face | Length of Bearing | Pin dimensions | | Barrel Sectional Dimensions | | | Breaking Load | Weight Approx. |
|---|---|---|---|---|---|---|---|---|---|---|---|---|---|
| | P | C | H | T | A (min) | X (max) | D | L | B | E | W | Q | q |
| | mm | mm | mm | mm | mm | mm | mm | mm | mm | mm | mm | KN | Kg/FT |
| WD102 | 127 | 38.1 | 38.1 | 9.7 | 162 | 197.1 | 19.05 | 233 | 19.7 | 38.1 | 31.7 | 226 | 5.47 |
| WDH104 | 152.4 | 38.1 | 38.1 | 9.7 | 104.8 | 136.53 | 19.05 | 173 | 19.7 | 38.1 | 31.7 | 226 | 4.56 |
| WD110 | 152.4 | 38.1 | 38.1 | 9.7 | 235 | 264 | 19.05 | 296 | 19.7 | 38.1 | 31.7 | 250 | 5.75 |
| WD112 | 203.2 | 38.1 | 38.1 | 9.7 | 228.6 | 260.5 | 19.05 | 296 | 19.7 | 38.1 | 31.7 | 170 | 4.7 |
| WD113 | 152.4 | 38.1 | 38.1 | 12.7 | 228.6 | 270.2 | 22.23 | 311 | 22.8 | 38.1 | 33.2 | 297 | 7.0 |
| WD116 | 203.2 | 44.45 | 44.45 | 9.7 | 330.2 | 358.8 | 19.05 | 395 | 23.65 | 44.45 | 36.65 | 250 | 6.72 |
| WD480 | 203.2 | 50.8 | 50.8 | 12.7 | 280 | 323.85 | 22.23 | 367 | 28.5 | 50.8 | 44.5 | 311 | 9.07 |

Quality Guaranteed

# Solid Pin Conveyor Chain

Quality Guaranteed

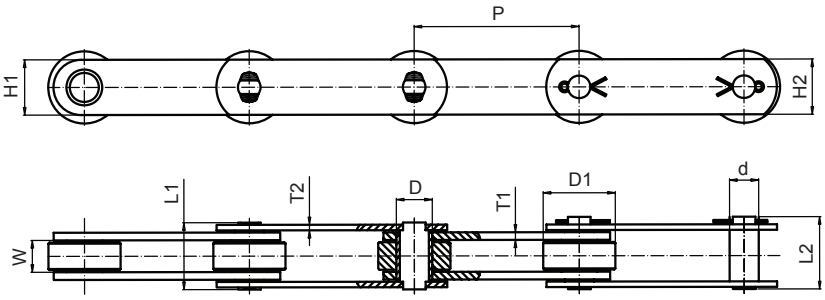


| Minimum Breaking Load (lbs) | Pitch (P) | | Roller Width (W) | Roller Dia D1 | Bush Dia D | Solid Pin Dia d | Solid Pin length (Max) L1 | Connecting pin length (Max) L2 | Inner Plate | | Outer Plate | | Avg Wt/ft in (kg) |
|---|---|---|---|---|---|---|---|---|---|---|---|---|---|
| | INCH | METRIC | | | | | | | Height H1 | Thickness T1 | Height H2 | Thickness T2 | |
| 7500 | 2.0 | 50.80 | 15.24 | 31.75 | 18.00 | 14.27 | 40.6 | 50.8 | 25.0 | 5.0 | 25.00 | 5.0 | 1.3 |
| | 3.0 | 76.20 | | | | | | | | | | | 1.2 |
| | 4.0 | 101.60 | | | | | | | | | | | 1.0 |
| | 6.0 | 152.40 | | | | | | | | | | | 0.9 |
| 15000 | 3.0 | 76.20 | 19.05 | 47.62 | 23.8 | 19.05 | 48.26 | 57.0 | 40.0 | 6.0 | 40.0 | 6.0 | 2.3 |
| | 4.0 | 101.60 | | | | | | | | | | | 2.0 |
| | 5.0 | 127.00 | | | | | | | | | | | 1.8 |
| | 6.0 | 152.40 | | | | | | | | | | | 1.6 |
| | 8.0 | 203.20 | | | | | | | | | | | 1.4 |
| 30000 | 4.0 | 101.60 | 25.40 | 66.67 | 33.0 | 27.0 | 61.98 | 74.0 | 50.0 | 8.0 | 50.0 | 6.0 | 4.3 |
| | 5.0 | 127.00 | | | | | | | | | | | 3.7 |
| | 6.0 | 152.40 | | | | | | | | | | | 3.4 |
| | 7.0 | 177.80 | | | | | | | | | | | 3.1 |
| | 8.0 | 203.20 | | | | | | | | | | | 2.9 |
| | 9.0 | 228.60 | | | | | | | | | | | 2.9 |
| | 10.0 | 254.00 | | | | | | | | | | | ??? |
| | 12.0 | 304.80 | | | | | | | | | | | 2.5 |
| 45000 | 6.0 | 152.40 | 38.10 | 88.90 | 38.10 | 31.75 | 84.13 | 110.5 | 65.0 | 10.0 | 65.0 | 8.0 | 7.1 |
| | 8.0 | 203.20 | | | | | | | | | | | 5.9 |
| | 9.0 | 228.60 | | | | | | | | | | | 5.5 |
| | 12.0 | 304.80 | | | | | | | | | | | 4.6 |
| 60000 | 6.0 | 152.40 | 38.10 | 88.90 | 38.10 | 31.75 | 84.13 | 110.5 | 65.0 | 10.0 | 65.0 | 8.0 | 7.1 |
| | 9.0 | 228.60 | | | | | | | | | | | 5.6 |
| | 12.0 | 304.80 | | | | | | | | | | | 4.6 |
| 85000 | 6.0 | 152.40 | 38.10 | 88.90 | 38.10 | 31.75 | 82.86 | 118.4 | 65.0 | 12.0 | 65.0 | 10.00 | 9.7 |
| | 9.0 | 228.60 | | | | | | | | | | | 8.3 |
| | 12.0 | 304.80 | | | | | | | | | | | 7.1 |

Quality Guaranteed

# High Side Plate Conveyor Chain

Quality Guaranteed

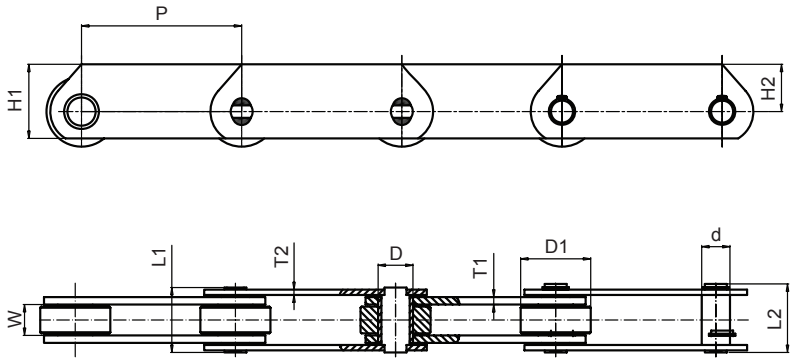


| Minimum Breaking Load (lbs) | Pitch (P) | | Roller Width (W) | Roller Dia D1 | Bush Dia D | Solid Pin Dia d | Solid Pin length (Max) L1 | Connecting pin length (Max) L2 | Inner Plate | | Outer Plate | | Avg Wt/ft in (kg) |
|---|---|---|---|---|---|---|---|---|---|---|---|---|---|
| | INCH | METRIC | | | | | | | Height H1 | Thickness T1 | Height H2 | Thickness T2 | |
| 7500 | 2.0 | 50.80 | 15.24 | 31.75 | 18.00 | 14.27 | 40.6 | 50.8 | 40.0 | 5.0 | 27.5 | 5.0 | 2.0 |
| | 3.0 | 76.20 | | | | | | | | | | | 1.7 |
| | 4.0 | 101.60 | | | | | | | | | | | 1.6 |
| | 6.0 | 152.40 | | | | | | | | | | | 1.4 |
| 15000 | 3.0 | 76.20 | 19.05 | 47.62 | 23.8 | 19.05 | 48.26 | 57.0 | 50.0 | 6.0 | 30.0 | 5.0 | 2.7 |
| | 4.0 | 101.60 | | | | | | | | | | | 2.5 |
| | 5.0 | 127.00 | | | | | | | | | | | 2.2 |
| | 6.0 | 152.40 | | | | | | | | | | | 2.0 |
| | 8.0 | 203.20 | | | | | | | | | | | 1.9 |
| 30000 | 4.0 | 101.60 | 25.40 | 66.67 | 33.0 | 27.0 | 61.98 | 74.0 | 75.0 | 8.0 | 50.0 | 6.0 | 5.1 |
| | 5.0 | 127.00 | | | | | | | | | | | 4.5 |
| | 6.0 | 152.40 | | | | | | | | | | | 4.1 |
| | 7.0 | 177.80 | | | | | | | | | | | 3.8 |
| | 8.0 | 203.20 | | | | | | | | | | | 3.3 |
| | 9.0 | 228.60 | | | | | | | | | | | 3.4 |
| | 10.0 | 254.00 | | | | | | | | | | | ??? |
| | 12.0 | 304.80 | | | | | | | | | | | 3.2 |
| 45000 | 6.0 | 152.40 | 38.10 | 88.90 | 38.10 | 31.75 | 84.3 | 110.5 | 90.0 | 10.0 | 61.0 | 8.0 | 8.2 |
| | 8.0 | 203.20 | | | | | | | | | | | – |
| | 9.0 | 228.60 | | | | | | | | | | | – |
| | 12.0 | 304.80 | | | | | | | | | | | – |
| 60000 | 6.0 | 152.40 | 38.10 | 88.90 | 38.10 | 31.75 | 84.13 | 110.5 | 90.0 | 10.0 | 65.0 | 8.0 | 8.1 |
| | 9.0 | 228.60 | | | | | | | | | | | 6.6 |
| | 12.0 | 304.80 | | | | | | | | | | | 5.5 |
| 85000 | 6.0 | 152.40 | 38.10 | 88.90 | 38.10 | 31.75 | 82.86 | 118.4 | 90.0 | 12.0 | 65.0 | 10.00 | 10.7 |
| | 9.0 | 228.60 | | | | | | | | | | | ??? |
| | 12.0 | 304.80 | | | | | | | | | | | 8.3 |

# Hollow Pin Conveyor Chain

Quality Guaranteed

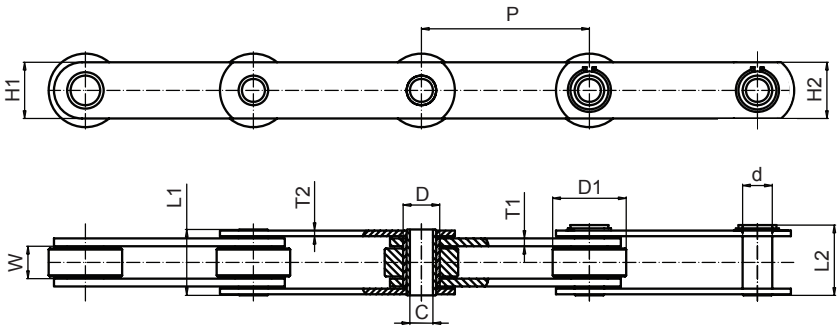


| Minimum Breaking Load (lbs) | Pitch (P) | | Roller Width (W) | Roller Dia D1 | Bush Dia D | Hollow Pin Bore Dia (Min) C | Hollow Pin Bore Dia (Min) | Hollow Pin Length L1 | Connecting pin length L2 | Inner Plate | | Outer Plate | |
|---|---|---|---|---|---|---|---|---|---|---|---|---|---|
| | INCH | METRIC | | | | | | | | Height H1 | Thickness T1 | Height H2 | Thickness T2 |
| 6000 | 2.0 | 50.80 | 15.24 | 31.75 | 18.00 | 10.0 | 14.27 | 40.2 | 40.6 | 25.0 | 5.0 | 23.0 | 5.0 |
| | 3.0 | 76.20 | | | | | | | | | | | |
| | 4.0 | 101.60 | | | | | | | | | | | |
| | 6.0 | 152.40 | | | | | | | | | | | |
| 12000 | 3.0 | 76.20 | 19.05 | 47.62 | 23.8 | 13.21 | 19.05 | 46.2 | 49.1 | 40.0 | 6.0 | 40.0 | 5.0 |
| | 4.0 | 101.60 | | | | | | | | | | | |
| | 5.0 | 127.00 | | | | | | | | | | | |
| | 6.0 | 152.40 | | | | | | | | | | | |
| | 8.0 | 203.20 | | | | | | | | | | | |
| 24000 | 4.0 | 101.60 | 27.0 | 66.67 | 33.0 | 20.2 | 27.0 | 61.2 | 63.8 | 50.0 | 8.0 | 50.0 | 6.0 |
| | 5.0 | 127.00 | | | | | | | | | | | |
| | 6.0 | 152.40 | | | | | | | | | | | |
| | 7.0 | 177.80 | | | | | | | | | | | |
| | 8.0 | 203.20 | | | | | | | | | | | |
| | 9.0 | 228.60 | | | | | | | | | | | |
| | 10.0 | 254.00 | | | | | | | | | | | |
| | 12.0 | 304.80 | | | | | | | | | | | |
| 36000 | 6.0 | 152.40 | 38.10 | 88.90 | 38.10 | 23.4 | 31.75 | 82.8 | 86.0 | 65.0 | 10.0 | 65.0 | 8.0 |
| | 8.0 | 203.20 | | | | | | | | | | | |
| | 9.0 | 228.60 | | | | | | | | | | | |
| | 12.0 | 304.80 | | | | | | | | | | | |

# Conveyor Chain Attachments

Quality Guaranteed

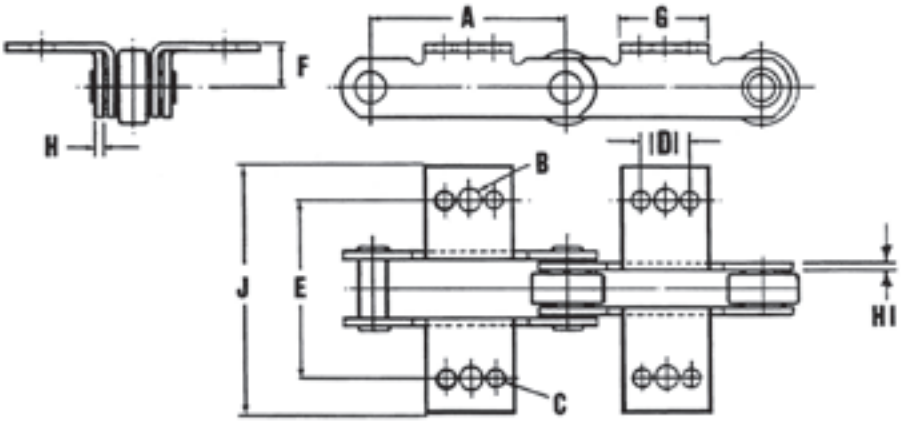


| CHAIN- BREAKING LOAD | | | ATTACHMENT HOLES | | | | | PLATFORM DETAILS | | | | | EXTRA |
|---|---|---|---|---|---|---|---|---|---|---|---|---|---|
| HOLLOW PIN | SOLID PIN | PITCH A | NUMBER HOLES | DIAM. | DIAM. | CENTRES | T/PITCH | HEIGHT | LENGTH | THICK | | Clearance | WEIGHT |
| | | | | B | C | D | E | F | G | H | HI | J | LINK/Kgs |
| 6,000 | 7,500 | 2 | 1 | 10.7 | – | – | 76.2 | 19 | 35.7 | 5 | 5 | 102.8 | 0.04 |
| 6,000 | 7,500 | 3 | 3 | 10.7 | 9.2 | 31.7 | 76.2 | 19 | 51.5 | 5 | 5 | 102.8 | 0.05 |
| 6,000 | 7,500 | 4 | 3 | 10.7 | 9.2 | 32.1 | 76.2 | 19 | 61.3 | 5 | 5 | 102.8 | 0.08 |
| 6,000 | 7,500 | 6 | 3 | 10.7 | 9.2 | 57.1 | 76.2 | 19 | 76.5 | 5 | 5 | 102.8 | 0.14 |
| 12,000 | 15,000 | 3 | 3 | 13.8 | 10.7 | 31.7 | 88.9 | 31.7 | 69.8 | 5 | 6 | 127.0 | 0.10 |
| 12,000 | 15,000 | 4 | 3 | 13.8 | 10.7 | 31.7 | 88.9 | 31.7 | 67.8 | 5 | 6 | 152.4 | 0.12 |
| 12,000 | 15,000 | 6 | 3 | 13.8 | 10.7 | 56.1 | 88.9 | 31.7 | 102.7 | 5 | 6 | 152.4 | 0.18 |
| 24,000 | 30,000 | 6 | 3 | 13.8 | 12.3 | 56.1 | 107.9 | 38.1 | 83.8 | 6 | 8 | 171.4 | 0.23 |
| 24,000 | 30,000 | 9 | 2 | – | 12.3 | 114.3 | 107.9 | 38.1 | 152.4 | 6 | 8 | 171.4 | 0.52 |

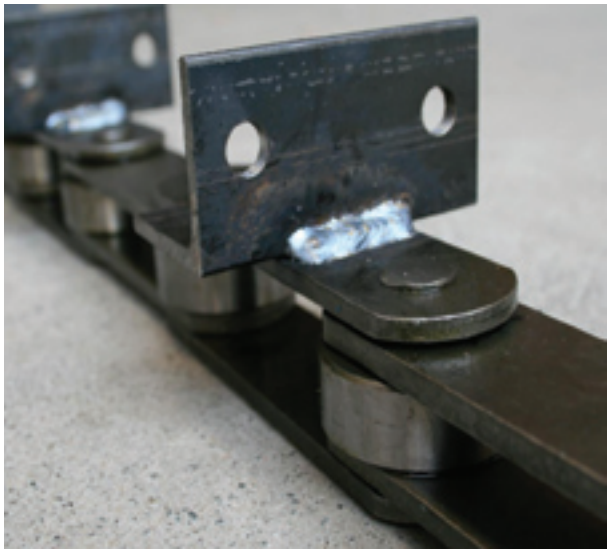

# Conveyor Chain Sprocket Pitch Diameters

Quality Guaranteed

| CHAIN PITCH DIAMETER (mm) | | | | | | | | |
|---|---|---|---|---|---|---|---|---|
| NO.OF TEETH | 2" PITCH | 3" PITCH | 4" PITCH | 5" PITCH | 6" PITCH | 8" PITCH | 9" PITCH | 12" PITCH |
| 6 | 101.6 | 152.4 | 203.2 | 254 | 304.8 | 406.4 | 457.2 | 609.6 |
| 7 | 117.1 | 175.5 | 234.2 | 292.6 | 351.3 | 468.4 | 526.8 | 702.6 |
| 8 | 132.7 | 199.1 | 265.5 | 331.9 | 398.4 | 531.0 | 597.3 | 795.4 |
| 9 | 148.5 | 222.8 | 297.1 | 371.3 | 445.6 | 594.2 | 668.4 | 891.2 |
| 10 | 164.4 | 246.6 | 328.8 | 411.0 | 493.2 | 657.6 | 739.7 | 986.3 |
| 11 | 180.3 | 270.4 | 360.6 | 450.7 | 540.9 | 721.2 | 811.3 | 1081.7 |
| 12 | 196.3 | 297.4 | 392.6 | 490.7 | 588.9 | 785.2 | 883.3 | 1177.7 |
| 13 | 212.3 | 318.4 | 424.6 | 530.7 | 636.9 | 849.2 | 955.3 | |
| 14 | 228.3 | 342.4 | 456.6 | 570.7 | 684.9 | 913.2 | 1027.3 | |
| 15 | 244.3 | 366.5 | 488.7 | 610.9 | 733.0 | 977.4 | 1099.6 | |
| 16 | 260.4 | 390.8 | 520.8 | 651.0 | 781.2 | 1041.6 | 1171.8 | |
| 17 | 276.5 | 414.7 | 552.9 | 691.1 | 829.4 | 1105.8 | | |
| 18 | 292.5 | 438.8 | 585.1 | 731.4 | 877.7 | 1170.2 | | |
| 19 | 308.7 | 463.0 | 617.3 | 771.7 | 926.0 | | | |
| 20 | 324.7 | 487.1 | 649.4 | 811.8 | 974.1 | | | |
| 21 | 340.8 | 511.3 | 681.7 | 852.2 | 1022.6 | | | |
| 22 | 357.0 | 535.5 | 713.9 | 892.4 | 1070.9 | | | |
| 23 | 373.1 | 559.6 | 746.2 | 932.7 | 1119.2 | | | |
| 24 | 389.2 | 583.8 | 778.4 | 972.9 | 1167.5 | | | |

# Bushed Steel Conveyor Chain

Quality Guaranteed

SS Series has hardened side bars, pins and bushes

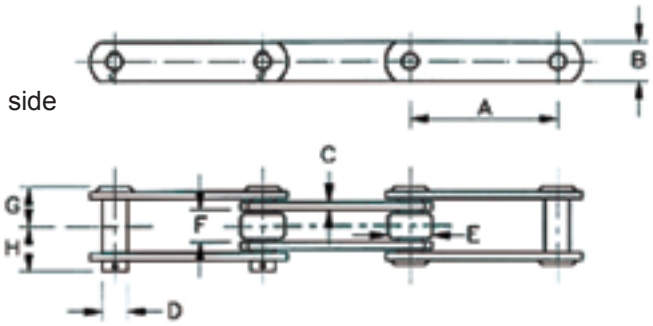


| Chain | Pitch | Plate Height | | | | | | |
|---|---|---|---|---|---|---|---|---|
| | A | B | C | D | E | F | G | h |
| SS188 | 66.27 | 28.50 | 6.00 | 12.70 | 22.30 | 25.40 | 34.30 | 36.80 |
| SS131 | 78.11 | 40.00 | 10.00 | 15.90 | 31.75 | 32.30 | 45.70 | 48.30 |
| SS102B | 101.60 | 40.00 | 10.00 | 15.90 | 25.40 | 54.00 | 59.70 | 62.20 |
| SS102B | 120.90 | 45.00 | 10.00 | 19.00 | 36.50 | 66.70 | 66.00 | 68.60 |
| SS102B | 152.40 | 40.00 | 10.00 | 15.90 | 31.75 | 54.00 | 55.90 | 58.40 |

K Attachments

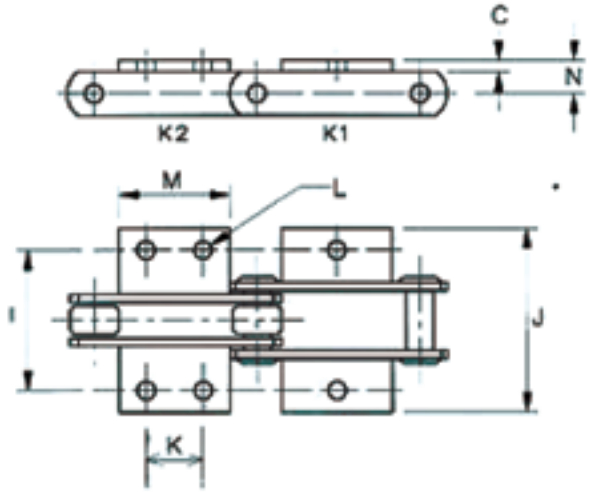


| Chain | Pitch | | | | | | |
|---|---|---|---|---|---|---|---|
| | A | I | J | K | L | M | N |
| SS188 | 66.27 | 106.38 | 146 | 31.75 | 9.5 | 55.1 | 20.6 |
| SS131 | 78.11 | 104.78 | 137 | 38.1 | 14.3 | 65 | 24.5 |
| SS102B | 101.60 | 134.95 | 171.5 | 44.5 | 11.1 | 74.9 | 25.4 |
| SS111 | 120.90 | 158.75 | 213.4 | 58.8 | 13.4 | 89 | 28.6 |
| SS110 | 152.40 | 134.95 | 177.8 | 44.5 | 11.1 | 74.9 | 25.4 |

Chains can be selected according to two methods:
1. General Selection
2. Slow-speed Selection

## 1. General Selection

The following information are essential to be able to select the appropriate chain and sprocket for roller chain transmission.

**Power to be transmitted. (kW)**

**Speed of driving shaft and driven shaft per minute**

Speed ratio refers to the ratio of the speed of the driving shaft to the speed of the driven shaft. The speed ratio of chains can range up to 7:1 under normal operating conditions.

The take-up angle between the smaller sprocket and the chain should be at least 120° to obtain smooth transmission.

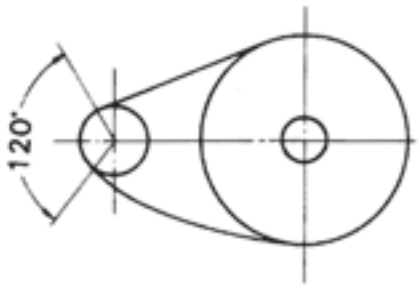


**Center distance between driving shaft and driven shaft**

Sprockets can be separated at any distance as long as their teeth do not touch. Optimum distance is 30 to 50 times the pitch of the chain used.

1) Adjust power to be transmitted (kW)

The actual power to be transmitted is affected by the load of the machine and power source used. Therefore, adjustments must be taken according to Service Factor shown in Table I. The power to be transmitted (kW) is multiplied by the corresponding service factor to obtain the design kW value.

**Table I : Service Factor**

| Type of Impact | Example of Machine | Type of Input Power | | |
|---|---|---|---|---|
| | | | Internal Combustion Engine | |
| | | Electric motor or turbine | With hydraulic drive | Without hydraulic drive |
| Smooth | Agitators, Centrifugal blowers, Textile machines, General machines with small load fluctuation. | 1.0 | 1.0 | 1.2 |
| Moderate | Centrifugal compressors, Conveyors with moderate load fluctuation, Dryers, General work machines. | 1.3 | 1.2 | 1.4 |
| Heavy | Construction or mining machines, Presses, Vibration machines, General machines with reverse or impact load. | 1.5 | 1.4 | 1.7 |

2) Determine roller chain and number of teeth of smaller sprocket

Use the Quick Selection Table (Table V) and select an appropriate chain and the number of teeth for small sprocket by referring to the number of revolutions of the high speed shaft (i.e., the driving shaft when the speed is reduced; the driven shaft when the speed is increased) and the design kW.

If the capacity of simplex chain is insufficient, select a multiplex chain. In this case, use the following table for multi-strand factor.

**Table II : Multi-strand Factor**

| Number of Roller Chain Strand | Multi - Strand Factor |
|---|---|
| 2 | 1.7 |
| 3 | 2.5 |
| 4 | 3.3 |
| 5 | 3.9 |
| 6 | 4.6 |

3) Determine of the number of teeth of large sprocket

After the number of teeth of the small sprocket is determined, multiply it by the speed ratio to determine the number of teeth of the large sprocket. The recommended maximum number of teeth is 114 or less.

4) Calculate Chain Length

The number of pitches (length of chain) can be obtained by the following formula : (Note: Raise the value to a unit to make it an integer.)

$$Lp = \frac{N_1 + N_2}{2} + 2\,Cp + \frac{[(N_2 - N_1)/2\pi]^2}{Cp}$$

L : Number of pitches of chain
$N_1$ : Number of teeth of small sprocket
$N_2$ : Number of teeth of large sprocket
C : Center distance of two sprockets / Chain pitch

If the number of pitches (length of chain) is already given, the center distance between the sprockets can be obtained by the following formula :

$$Cp = \frac{1}{4}\left\{ Lp - \frac{N_1 + N_2}{2} + \sqrt{\left(Lp - \frac{N_1 + N_2}{2}\right)^2 - \frac{2}{\pi^2}(N_2 - N_1)^2} \right\}$$

## 2. Slow-speed Selection

This is one of the economical selection methods based on fatigue strength of chain for conditions where (i) the operation speed of chain is 50m/min. or less, and (ii) there is no worry of wear elongation and shock fracture of rollers and bushings. However, a chain selected by this method may be subject to severe conditions, and thus, special care should be taken for the chain selection. The slow-speed selection method is not applicable to connecting link and offset link.

1) Calculate Chain Tension

If the chain tension is unknown, it can be obtained by using the following formula with kW of the input power to be transmitted.

$$F = \frac{60 \times kW}{V} \quad (kN)$$

F : Chain Tension
V : Chain Speed (m/min)

2) Determine Corrected Chain Tension

Chain tension needs to be corrected as per the conditions of use, in the same way as described in General Selection part. Use Service Factor (Table I) and then use Sprocket Tooth Factor (Table III) and Speed Factor (Table IV) to take into consideration increase of tension caused by vibration, centrifugal force, inertia force, etc.. The corrected Chain Tension can be obtained using the following formula;

Corrected Chain Tension = Chain Tension x Service Factor x Sprocket Teeth Factor x Speed Factor

**Table III : Sprocket tooth Factor**

| Number of Tooth on Small Sprocket | Sprocket Tooth | Number of Tooth on Small Sprocket | Sprocket Tooth |
|---|---|---|---|
| 9 | 1.085 | 19 | 1.022 |
| 11 | 1.068 | 21 | 1.014 |
| 13 | 1.054 | 23 | 1.007 |
| 15 | 1.042 | 25 or over | 1.0 |
| 17 | 1.031 | | |

**Table IV : Speed Factor**

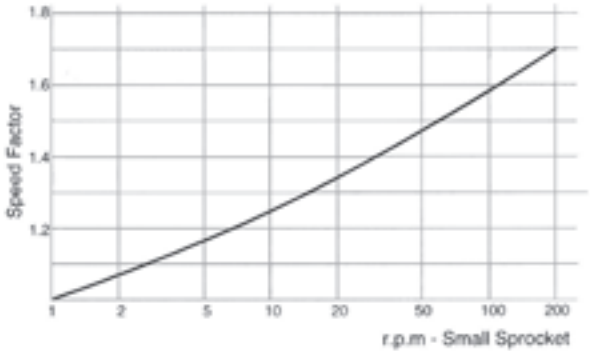


3) Determine the Chain

If the maximum allowable tension stated in the table of each chain dimensions is larger than the corrected chain tension, the chain is selected correctly.

4) Check Chain Speed

The chain speed can be calculated using the formula below. If the chain speed exceeds 50m/min., choose General Selection instead of Slow-speed Selection.

$$V = \frac{P \times N_1 \times r_1}{1000}$$

V : Chain Speed (m/min)
P : Chain Pitch (mm)
$N_1$ : Teeth of small sprocket
$r_1$ : Revolution of Small Sprocket (r.p.m)

The method for determining the number of teeth of large sprocket and calculation of chain length is the same as those described at General Selection part.
Consult with GB Power for the chain use for (i) transmission of frequent go-and-stop, and (ii) inversion with impact load.

**Table V : Quick Selection Table**

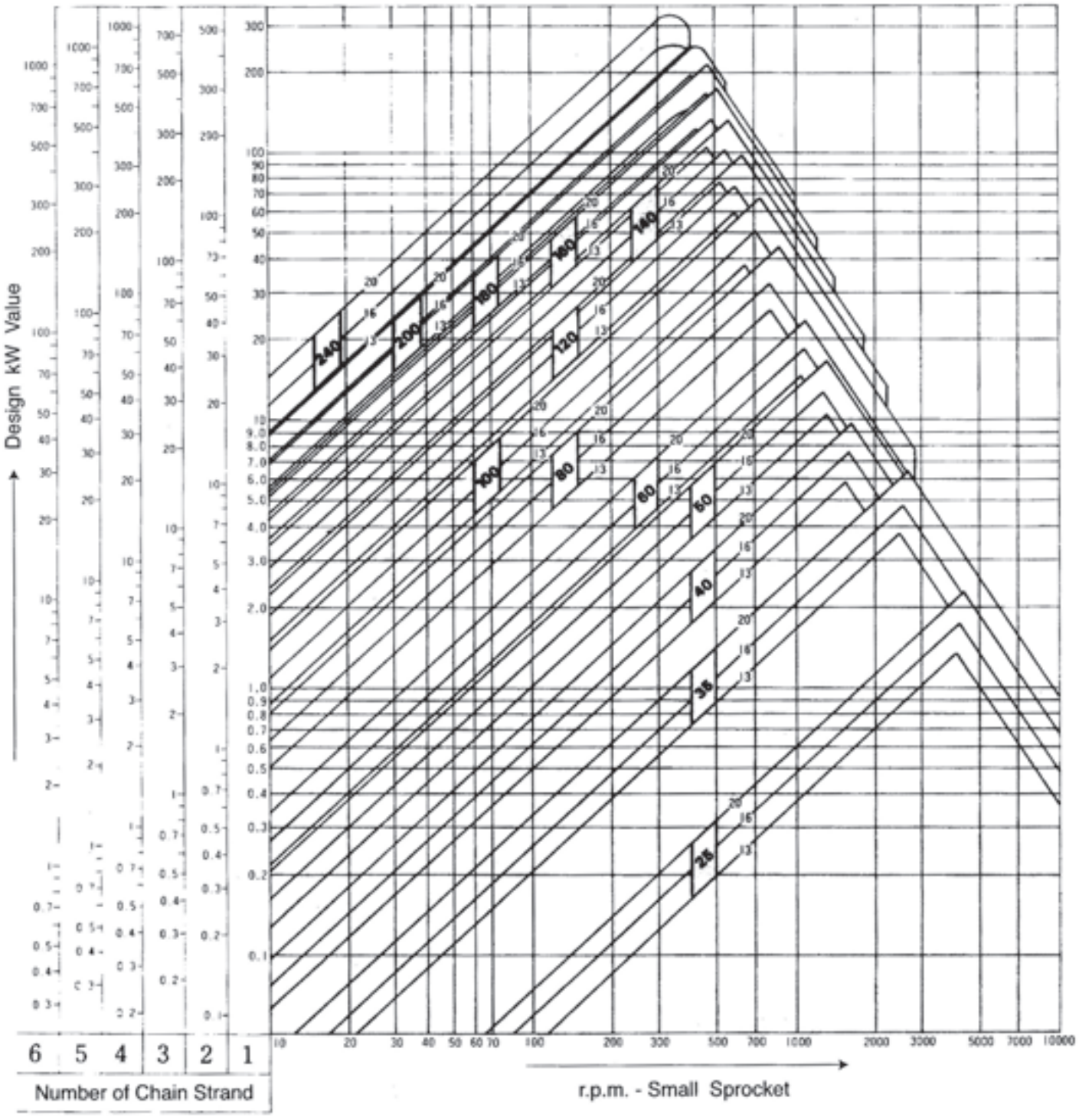


## How to use this table

A Chain and the teeth of sprocket are easily selected by checking the intersection of revolution per minute (r.p.m.) of design kW (vertical axis) and small sprocket (horizontal axis).

Example :

Assume design kW to be 5kW, and the r.p.m. of the small sprocket at 100.
By taking the intersection point of this design kW value of 5kW and the rpm value of 100, one can derive GB Power 80 chain and a sprocket with 16T from the chart.,

# Roller Chain Lubrication

Quality Guaranteed

Generally, the life span of the chain depends on how the chain is stretched by the abrasions of the pin and the bushing. It is, therefore, necessary to use skillfully the chain in order to reduce the amount of such abrasions. To be able to do so, the most important aspect to give attention to is the process called "lubrication". Accordingly, extending the lifespan of the chain goes hand in hand with choosing the most appropriate method of lubrication that best fits the chain's type and revolution per minute, atmosphere, temperature, etc.

## Points of Lubrication

Lubrication of the chain is done by dropping enough lubricant in between spaces of the pin link plate and roller link plate. With adequate saturation, abrasion is minimized and the life span of the chain is extended. Likewise, when the top of the roller is lubricated, abrasion between metals is prevented as an oil film forms in the interior of the roller and exterior of the bushing.

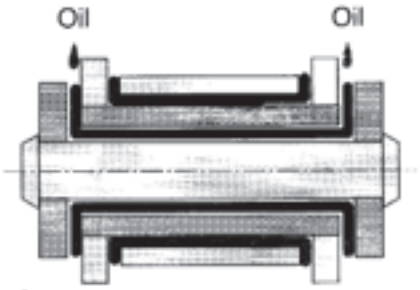


## Type of Lubricant

Use only high quality materials as lubricant for the roller chain power transmmision. The degree of viscosity of greasy materials is too high, and therefore unsuitable as they cannot penetrate the space between the pin and the bushing. Generally, mobile oil is used.
Selection is shown in Table VI.

**Table VI : Type of Lubricant**

| Atmospheric Temperature | Recommended Oil |
|---|---|
| -5° C ~ 5° C | SAE 20 |
| 5° C ~ 40° C | SAE 30 |
| 40° C ~ 50° C | SAE 40 |
| 50° C ~ 60° C | SAE 50 |

In case the atmosphere and temperature will be below -5° C and 60° C or higher, consult with our company as it will require a special type of lubricant.

## Method of Lubrication

| Method of Lubrication | | Form of Lubrication |
|---|---|---|
| | Aim at the space between pin link and roller link of the loosen part of the chain; lubricate it with a greaser or a brush. | Periodically lubricate the roller every 8 hours when it is in operation to at least prevent drying. |
| 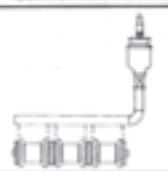 | With the use of a simple casing, drop oil and lubricate by using an oil cup, etc. | Each strand of chain should normally receive 5~20 drops of oil per minute. |
| | With the use of an oil leak-proof casing, lubricate while the chain is running inside the oil reservoir. | Soak the bottom part of the chain in 6~12 mm of oil. |
| | Provide a pool of oil inside an oil leak-proof casing, attach a large slinger disc from the diameter of the sprocket, splash oil and lubricate the chain. | The side of the oil is lower than the lowest point of the chain, and soak the slinger disc in oil about 15mm. |
| 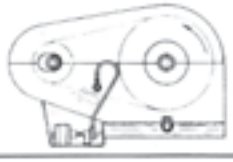 | With the use of an oil leak-proof casing, do forceful cyclical lubrication of oil from the pump. | If the supply of oil stops due to some malfunction in the circulatory system, caution should be taken while trouble shooting the problem about maintenance to prevent accidents. |

Quality Guaranteed

# New Hitachi SBR-Prime Roller Chain Now Available

As the exclusive importer of the Hitachi range of premium quality roller chain GB Power Transmission is very pleased to announce the arrival of the New SBR-Prime series Roller Chain. Hitachi's previous range of roller chain, the SBR and Neo-SBR has outperformed competitors for the last 20 years and now one of the markets most respected brands just got 30% better. In 1987, Hitachi introduced the first premium line of solid bushing/solid roller (SBR) industrial chain products. Cold forged solid steel parts replaced traditional curled components to increase the strength and extend chain life. In 1997 Hitachi added a unique Neo coating to pins and bushings and redesigned the connecting link. A market leading product was made better as Hitachi's design focus shifted to increasing the chain wear life and improving the endurance of the connecting link. The new coating assisted lubrication and protected against corrosion providing and additional 5%-10% increase in wear life.

## *Maximum Allowable Load Increased by +30%*

Hitachi Metals Techno, Ltd.

In 2009 Hitachi went into full production of the new SBR-Prime series roller chain across the standard range. Hitachi once again were the front runner and introduced new innovations in manufacturing technologies and parts processing which has lead to the development of the New SBR-Primes series roller chains. More information on the SBR-Prime series roller chain including full specification is available by requesting a catalogue from GB Power Transmission and our Distributors.

***The new Hitachi SBR Prime chain now offers up to 30% increase in Maximum Allocable Load (M.A.L) compared with its leading competitors.***

Quality Guaranteed

# OTHER QUALITY PRODUCTS

Quality Guaranteed

## Hitachi SBR-Prime Roller Chain

Hitachi Metals Techno, Ltd.

**AS & BS Roller Chain - Leaf Chain - Crank Link Chain**

## Hitachi CR Roller Chain

Hitachi Metals Techno, Ltd.

**Corrosion Resistant Roller Chain**

**AS & BS Roller Chain - Conveyor Chain - Chain Attachments**

## GB Sprockets

Quality Guaranteed

**Pilot Bore - Taper Fit - Weld Fit**

## GB Taper Fit

Quality Guaranteed

**Imperial & Metric Bushes - Weld on Hubs**

## Pulleys

Quality Guaranteed

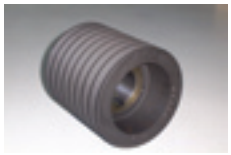

**Cast Iron Taper Fit - Cast Iron Pilot Bore**

## Chain and Belt Tensioner

Quality Guaranteed

**Classical Belts - Wedge Belts**

## GB Couplings

Quality Guaranteed

**HRC, Jaw & Chain - Tyre ,Cone Ring & Rigid - Standard Spacers**

**YOUR LOCAL DISTRIBUTOR**

## GB Conveyor Chain

Quality Guaranteed

**2 to 12” Pitch Conveyor Chain**