CHAIN & DRIVES
COMPLETE POWER TRANSMISSION
POWER > SPEED > TORQUE

GKN LAND SYSTEMS

Stromag
safety in motion

PRODUCT CATALOGUE

Couplings >

Highly flexible
GKN STROMAG PERIFLEX® VN DISC COUPLING

ENGINEERING > THAT MOVES THE WORLD

Series overview: GKN Stromag Periflex® disc couplings >

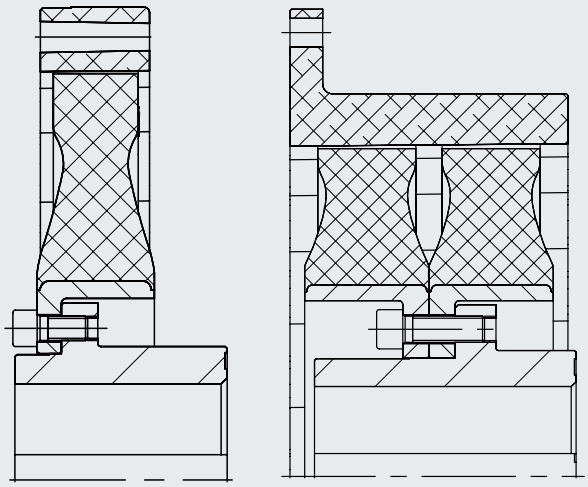

Periflex®VN / -VP...G Series
Nominal torque range 160 – 63,000 Nm

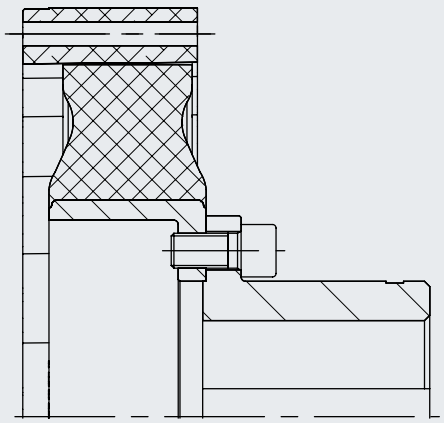

Periflex®VN / -VP...R Series; radial installations
Nominal torque range 160 – 63,000 Nm

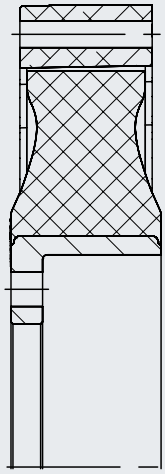

Periflex®VN...G / ON Series
Nominal torque range 160–63,000 Nm

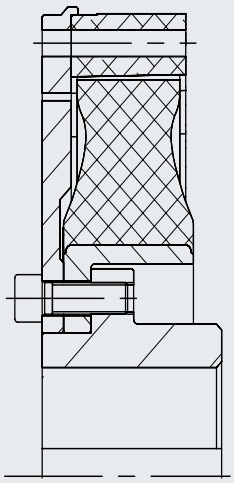

Periflex®VN / -VP...GB Series; with antirotation stop
Nominal torque range 160 – 63,000 Nm

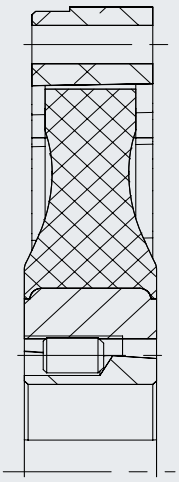

Periflex®VN...S Series
Nominal torque range 250 – 8000 Nm

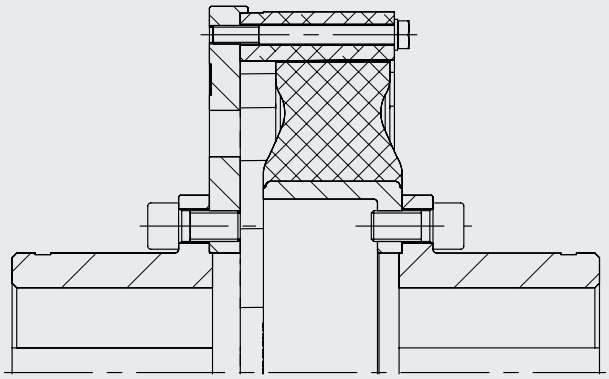

Periflex®VN /-VP...W Series; shaft coupling
Nominal torque range 160 – 63,000 Nm

Catalogue no. D 804, 08.2013 >

All issues containing details on GKN Stromag Periflex® Disc Couplings prior to this publication may no longer apply.
We reserve the right to modify measurements and designs without prior notice.

GKN Stromag products conform to the quality standard
under DIN ISO 9001

Content

THE GKN STROMAG PERIFLEX® DISC COUPLING CONCEPT >

GKN Stromag PVN couplings are highly flexible elastomer couplings with linear spring characteristics ideal for diesel engine drives.
The Series covers the torque range 160 – 63,000 Nm. The external companion dimensions conform as standard to the flywheel connections under the SAE standard J620. The larger couplings are basically designed with metric flywheel connections.
The GKN Stromag PVN coupling allows fast and simple connection of a flange, specifically a flywheel, to a shaft. Some designs also allow the connection of two shafts.
The GKN Stromag PVN coupling is a coupling that features an axial plug-in connection for easy installation and removal, for both the entire coupling and the flexible element.
At the fully intermeshing teeth on the connection ring, the disc tyre can be displaced along its axis by several millimetres when no torque is applied.
Each GKN Stromag PVN size comes with a range of elastomer qualities and torsional spring stiffnesses. These allow precise configurations for drives susceptible to torsional vibrations.

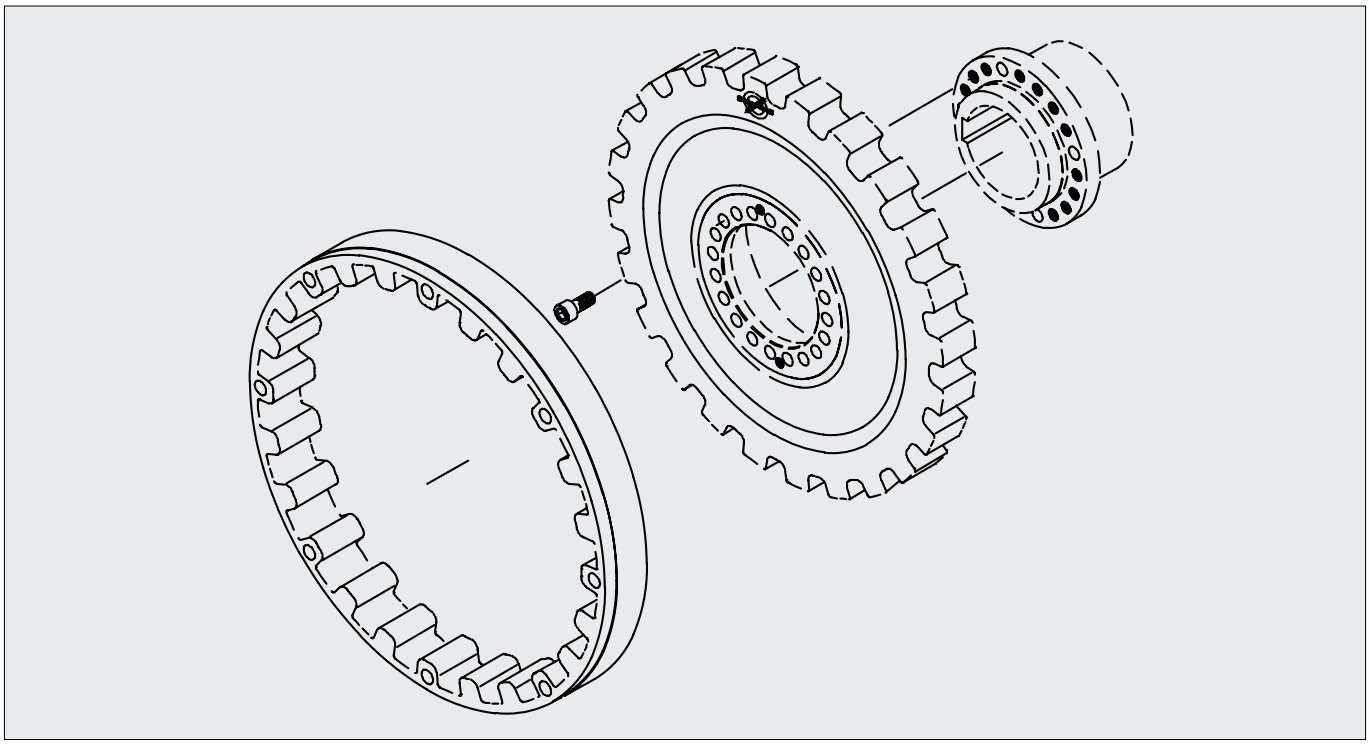

Application fields

GKN Stromag PVN couplings are designed for use on piston engines. The connection ring can be bolted directly to the flywheel of an engine or compressor.
Its axial plug-in design presents particular advantages e.g. for installations under bell covers.
Other application fields are electrical assemblies; compressors; construction machinery; engine and shipbuilding; and general machinery.

INSTRUCTIONS FOR THE DESIGNER >

The GKN Stromag Periflex®VN coupling hubs are of steel or ductile cast iron. The connection ring is of aluminium. The disc tyres consist of a steel or ductile cast iron V ring with a lining of vulcanised elastomer. The variants of natural rubber (NR) can be used at temperatures of -50 °C to +80 °C.
The variants of temperature resistant material (ECO) can be used at temperatures of -40 °C to +120 °C. In addition, ECO is resistant to ozone and oil.
Damping work may cause the flexible element to reach temperatures higher than ambient. This must be considered when the coupling is to be fitted with a guard or cowl, and adequate ventilation and heat dissipation must be provided.

The GKN Stromag Periflex®VN coupling can be delivered with EN 10204 acceptance as defined in the classification societies' rules.

The coupling complies with the requirements under API 671 with consideration to our list of deviations TM 800.0010.
This list of deviations is available from the GKN Stromag AG departments.

Ex Use in potentially explosive environments

The coupling conforms to the requirements under Directive 94/9/EC (ATEX 95) and can be used as follows:

a. Zone 1 (gas, Category 2G) in Groups IIA, IIB, and IIC, T4
b. Zone 2 (gas, Category 3G) in Groups IIA, IIB, and IIC, T4
c. Zone 22 (dust, Category 3D) for dusts with a minimum ignition energy › 3 mJ, T 125 °C

The GKN Stromag Periflex®VN coupling compliance with the requirements for each of these zones / categories is documented in the form of the following codes on our products:

Use in gas atmospheres:

Ex II 2G c T4

Use in dust atmospheres:

Ex II 3D c 125 ºC

Use in potentially explosive environments must be based on the request form annexed to this catalogue.

Classification rules

The acceptance of a coupling by a classification society must observe the rules issued by this society. Under certain circumstances, the coupling characteristics may differ from the definitions provided in this catalogue. In such events, prepared data sheets are available on request. A number of classification societies prescribe fail-safe devices on ships' main drives.

Fail-safe device

The Stromag Periflex®VN coupling is available with an fail-safe device. A rupture in the flexible element causes claws to intermesh, forming a torsionally rigid, backlash connection between the drive and output sides. Temporary emergency operation is possible with limited torque. The maximum torques and speeds must be calculated separately on the basis of torsional vibrations transferred via a torsionally rigid structure.

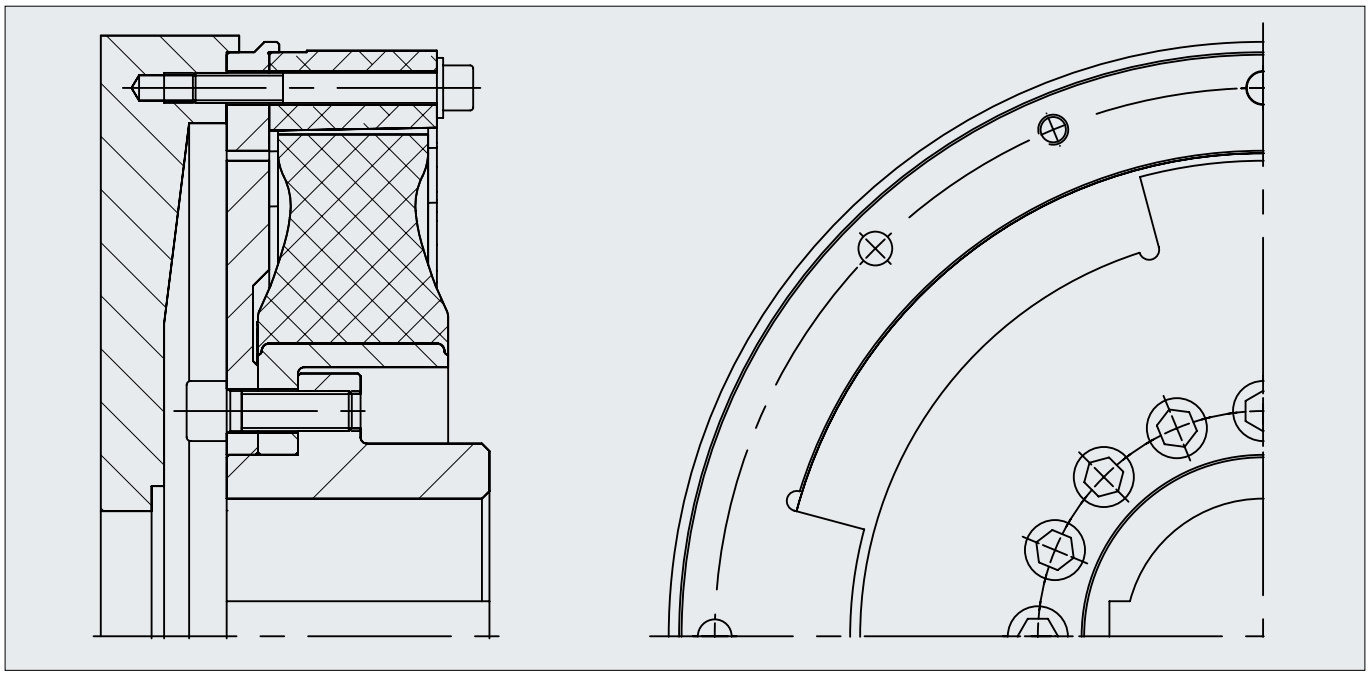

INSTRUCTIONS ON CHOOSING THE COUPLING SIZE >

The static and dynamic characteristics of GKN Stromag Periflex®VN couplings are available. These can help in the choice of a coupling size suitable for the specific application. The key factors are the loads induced by the transferred power and torsional vibrations. Stationary operating modes must be based on T_{KN}, T_{KW}, and P_{KV}, nonstationary operating modes on the T_{Kmax} values.

GKN Stromag AG departments can provide support, specifically in calculating the torsional vibrations. We therefore ask you to complete and send us the question sheet annexed to this catalogue.

As a rule, flexible couplings are a safety feature in the form of a predetermined breaking point on a drive train. Hence, overloading a drive train generally leads to failure of the flexible coupling element. This behaviour is intentional and protects the entire system from unforeseen damage. Any consequential damage arising from this safety function of the coupling must be considered in advance by the system designer and monitored or eliminated with suitable measures.

INSTALLATION INSTRUCTIONS AND SCOPE OF DELIVERY >

The GKN Stromag Periflex®VN coupling is fitted with a connection ring (1) that allows it to be bolted directly to the engine's flywheel. The hub (3) of the disc tyre (2) is secured to the machine with bolts (4).
The drive and output sides are moved together to the prescribed distance (blind installation), whereby the tyre's teeth must engage over the entire length of the connection ring.
The maximum displacements can be taken from the dimensions and ratings tables.

Delivery of the standard version includes:

1 = connection ring
2 = disc tyre
3 = hub
4 = bolts

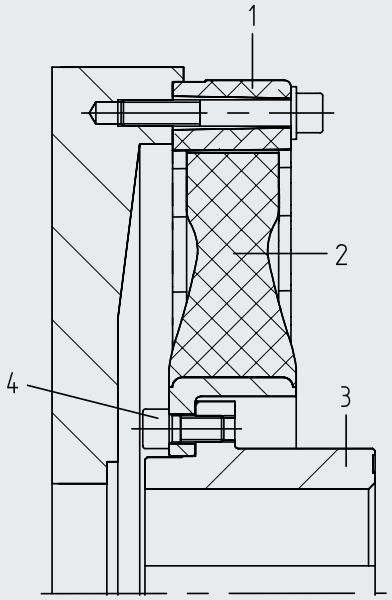

Storing flexible rubber elements

When stored properly, flexible rubber elements retain their properties over several years. It is essential here that the stored parts are protected against oxygen, ozone, light, heat, moisture, and solvents. Solvents, fuels, lubricants, chemicals, acids, disinfectants, and similar may not be stored in the same room. The storage temperature should not be lower than +10 °C and no higher than +25 °C.
All UV light sources are harmful and must be avoided. Equipment that generates ozone, e.g. light sources and electric motors, must be kept away from the storage location. The relative air humidity should not exceed 65 %.

Further details can be taken from the DIN 7716 sheet.

GKN STROMAG PERIFLEX® VN NR SERIES OUTPUT TABLE >

Coupling size	Tyre	Nominal torque	Max torque	Adm. alternating torque	Adm. radial displace-ment	Radial stiffness	Torsional stiffness	Relative damping	Adm. damp-ing power	SAE connection	Max Speed
		T_{KN} Nm	T_{Kmax} 1) Nm	T_{KW} Nm	ΔK_r mm	$C_{r\ dyn}$ 4) N/mm	$C_{T\ dyn}$ 2) 4) Nm/rad	ψ 2) 4)	$P_{KV\ 60}$ 3) 5) W		n_{max} min^{-1}
Periflex® VN 183	VN 18311	160	480	80	0,4	375	1150	0,80	104	6 ½“	5000
	VN 18331	200	480	100		600	1510	0,96	104	7 ½“	4400
	VN 18321	200	480	100		730	1900	1,00	104	8“	4000
	VN 18341	200	480	100		900	2240	1,20	104		
	VN 18351	200	480	100		1500	3910	1,30	104		
Periflex® VN 230	VN 23011	250	750	125	0,5	400	1510	0,80	156	8“	4000
	VN 23031	315	750	155		650	2000	0,96	156	10“	3600
	VN 23021	315	750	155		800	2760	1,00	156		
	VN 23041	315	750	155		950	3260	1,20	156		
	VN 23051	315	750	155		1600	5690	1,30	156		
Periflex® VN 280	VN 28011	400	1200	200	0,6	350	2280	0,80	221	10“	3600
	VN 28031	500	1200	250		750	3300	0,96	221	11 ½ “	3600
	VN 28021	500	1200	250		900	4160	1,00	221		
	VN 28041	500	1200	250		1060	4920	1,20	221		
	VN 28051	500	1200	250		1750	8580	1,30	221		
Periflex® VN 283	VN 28311	630	1900	315	0,6	500	3760	0,80	234	10“	3600
	VN 28331	800	1900	400		1050	5450	0,96	234	11 ½“	3600
	VN 28321	800	1900	400		1270	7200	1,00	234		
	VN 28341	800	1900	400		1500	8120	1,20	234		
	VN 28351	800	1900	400		2450	14170	1,30	234		
Periflex® VN 350	VN 35011	1000	3000	500	0,7	750	7660	0,80	260	11 ½“	3600
	VN 35031	1250	3000	625		1200	11100	0,96	260	14	3000
	VN 35021	1250	3000	625		1500	13990	1,00	260		
	VN 35041	1250	3000	625		1800	16540	1,20	260		
	VN 35051	1250	3000	625		3000	28860	1,30	260		
Periflex® VN 358	VN 35811	1600	4800	800	0,5	3400	16700	0,80	260	11 ½“	3600
	VN 35831	2000	4800	1000		5100	24200	0,96	260	14“	3000
	VN 35821	2000	4800	1000		6300	33200	1,00	260		
	VN 35841	2000	4800	1000		7650	36060	1,20	260		
	VN 35851	2000	4800	1000		12600	58500	1,30	260		
Periflex® VN 430	VN 43011	1600	4800	800	0,9	660	7800	0,80	494	14“	3000
	VN 43031	2000	4800	1000		1400	11300	0,96	494	18“	2400
	VN 43021	2000	4800	1000		1700	13900	1,00	494		
	VN 43041	2000	4800	1000		2000	16840	1,20	494		
	VN 43051	2000	4800	1000		3300	29380	1,30	494		
Periflex® VN 433	VN 43311	2500	7500	1250	0,8	1400	18630	0,80	520	14“	3000
	VN 43331	3150	7500	1550		2300	27000	0,96	520	18	2400
	VN 43321	3150	7500	1550		2870	34020	1,00	520		
	VN 43341	3150	7500	1550		3450	40230	1,20	520		
	VN 43351	3150	7500	1550		5700	70200	1,30	520		
Periflex® VN 436	VN 43611	4000	12000	2000	0,7	2300	25400	0,80	572	14“	3000
	VN 43631	5000	12000	2500		3800	34600	0,96	572	16“	2600
	VN 43621	5000	12000	2500		4750	46600	1,00	572	18“	2400
	VN 43641	5000	12000	2500		5700	53640	1,20	572		
	VN 43651	5000	12000	2500		9400	93600	1,30	572		
Periflex® VN 439	VN 43911	3200	10000	1600	0,7	1750	36230	0,80	390	14“	3000
	VN 43931	4000	10000	2000		2600	52500	0,96	390	16“	2600
	VN 43941	4000	10000	2000		3900	76000	1,20	390	18“	2400
	VN 43951	4000	10000	2000		6500	136500	1,30	390		
Periflex® VN 544	VN 54411	6300	19000	3150	0,8	3100	62790	0,80	622	18“	2400
	VN 54431	8000	19000	4000		5100	91000	0,96	622	21“	1800
	VN 54421	8000	19000	4000		7600	114700	1,00	622		
	VN 54441	8000	19000	4000		11400	135600	1,20	622		
	VN 54451	8000	19000	4000		17100	226400	1,30	622		
Periflex® VN 549	VN 54911	8000	17000	4000	0,8	6000	88320	0,80	650	18“	2400
	VN 54931	9000	20000	4500		9000	128000	0,96	650	21“	1800
	VN 54921	9500	21000	4750		11250	161300	1,00	650		
	VN 54941	11000	22000	5500		13500	204700	1,20	650		
	VN 54951	12000	25000	6000		22000	332800	1,30	650		
Periflex® VN 666	VN 66611	16000	48000	8000	0,8	6100	111800	0,80	1100	21“	1800
	VN 66631	20000	48000	10000		10200	162000	0,96	1100	24“	1800
	VN 66621	20000	48000	10000		15200	205000	1,00	1100		
	VN 66641	20000	48000	10000		22800	241400	1,20	1100		
	VN 66651	20000	48000	10000		34200	428500	1,30	1100		
Periflex® VN 726	VN 72611	28500	68500	14250	0,8	7080	225000	0,80	1300	24“	1500
	VN 72631	31500	75500	15750		11800	300000	0,96	1300		
	VN 72621	31500	75500	15750		17630	370000	1,00	1300		
	VN 72641	31500	75500	15750		26450	530000	1,20	1300		
	VN 72651	31500	75500	15750		39670	950000	1,30	1300		

GKN STROMAG PERIFLEX®VP NR SERIES RATINGS TABLE >

Coupling size	Tyre	Nominal torque	Max torque	Adm. alternating torque	Adm. radial displace-ment	Radial stiffness	Torsional stiffness	Relative damping	Adm. damp-ing power	SAE connection	Max Speed
		T_{KN} Nm	T_{Kmax} 1) Nm	T_{KW} Nm	ΔK_r mm	$C_{r\ dyn}$ 4) N/mm	$C_{T\ dyn}$ 2) 4) Nm/rad	ψ 2) 4)	$P_{KV\ 60}$ 3) 5) W		n_{max} min^{-1}
Periflex® VP 433	VN 43311	5000	15000	2500	0,8	2800	37260	0,80	1040	18“	2400
	VN 43331	6300	15000	3100		4600	54000	0,96	1040		
	VN 43321	6300	15000	3100		5740	68040	1,00	1040		
	VN 43341	6300	15000	3100		6900	80460	1,20	1040		
	VN 43351	6300	15000	3100		11400	140400	1,30	1040		
Periflex® VP 436	VN 43611	8000	24000	4000	0,7	4600	50800	0,80	1140	18“	2400
	VN 43631	10000	24000	5000		7600	69200	0,96	1140		
	VN 43621	10000	24000	5000		9500	93200	1,00	1140		
	VN 43641	10000	24000	5000		11400	107300	1,20	1140		
	VN 43651	10000	24000	5000		18800	187200	1,30	1140		
Periflex® VP 439	VN 43911	6400	20000	3200	0,7	3500	72460	0,80	780	18“	2400
	VN 43931	8000	20000	4000		5200	105000	0,96	780		
	VN 43941	8000	20000	4000		7800	152000	1,20	780		
	VN 43951	8000	20000	4000		13000	273000	1,30	780		
Periflex® VP 544	VN 54411	12600	38000	6300	0,8	6200	125600	0,80	1240	21“	1800
	VN 54431	16000	38000	8000		10200	182000	0,96	1240		
	VN 54421	16000	38000	8000		15200	229300	1,00	1240		
	VN 54441	16000	38000	8000		22800	271200	1,20	1240		
	VN 54451	16000	38000	8000		34200	452800	1,30	1240		
Periflex® VP 549	VN 54911	16000	34000	8000	0,8	12000	176600	0,80	1300	21“	1800
	VN 54931	18000	40000	9000		18000	256000	0,96	1300		
	VN 54921	19000	42000	9500		22500	322600	1,00	1300		
	VN 54941	22000	44000	11000		27000	400400	1,20	1300		
	VN 54951	24000	50000	12000		44000	665600	1,30	1300		
Periflex® VP 666	VN 66611	32000	96000	16000	0,8	12200	223600	0,80	2200	24“	1800
	VN 66631	40000	96000	20000		20400	324000	0,96	2200		
	VN 66621	40000	96000	20000		30400	410000	1,00	2200		
	VN 66641	40000	96000	20000		45600	482800	1,20	2200		
	VN 66651	40000	96000	20000		68400	857000	1,30	2200		
Periflex® VP 726	VN 72611	57000	137000	28500	0,8	14160	450000	0,80	2600	metrisch	1500
	VN 72631	63000	151000	31500		23600	600000	0,96	2600		
	VN 72621	63000	151000	31500		35260	740000	1,00	2600		
	VN 72641	63000	151000	31500		52900	1060000	1,20	2600		
	VN 72651	63000	151000	31500		79340	1900000	1,30	2600		

1) The values listed in the tables refer to the disc tyre characteristics.
2) For: $T_W = 0.2 \bullet T_{KN}$; $T = 0.8 \bullet T_{KN}$; f = 10 Hz; = 30 °C
3) This value must be reduced by the temperature factor when the coupling temperatures are higher than 30 °C.
4) Tolerances on the materials may be as high as ±15%.

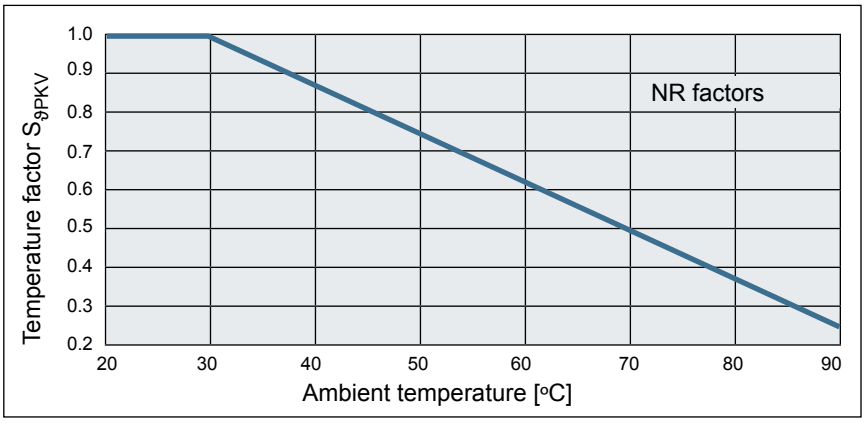

5) The $P_{KV\ 60}$ value represents the damping power that can be absorbed over a period of 60 minutes. The damping power that can be absorbed permanently is $P_{KV\infty} = 0.5 \bullet P_{KV\ 60}$.

GKN STROMAG PERIFLEX®VN ECO SERIES RATINGS TABLE >

Coupling size	Tyre	Nominal torque	Max torque	Adm. alternating torque	Adm. radial displace-ment	Radial stiffness	Torsional stiffness	Relative damping	Adm. damping power	SAE connection	Max Speed
		T_{KN} Nm	T_{Kmax} 1) Nm	T_{KW} Nm	ΔK_r mm	$C_{r\ dyn}$ 4) N/mm	$C_{T\ dyn}$ 2) 4) Nm/rad	ψ 2) 4)	$P_{KV\ 60}$ 3) 5) W		n_{max} min^{-1}
Periflex® VN 183	VN 18314 VN 18324	150 200	450 480	75 100	0,4	375 730	1550 3650	0,8 1,0	104 104	6 ½“ 8“	5000 4000
Periflex® VN 230	VN 23014 VN 23024	230 315	690 750	120 155	0,5	400 800	1650 4500	0,8 1,0	156 156	8“ 7 ½“ 10“	4000 4400 3600
Periflex® VN 280	VN 28014 VN 28024	360 500	1100 1200	180 250	0,6	350 900	2600 6200	0,8 1,0	221 221	10“ 11 ½ “	3600 3600
Periflex® VN 283	VN 28314 VN 28324	570 800	1700 1900	290 400	0,6	500 1270	4100 8300	0,8 1,0	234 234	10“ 11 ½“	3600 3600
Periflex® VN 350	VN 35014 VN 35024	1000 1250	3000 3000	500 625	0,7	750 1500	8450 21850	0,8 1,0	260 260	11 ½“ 14“	3600 3000
Periflex® VN 358	VN 35814 VN 35824	1400 2000	4200 4800	700 1000	0,5	3400 6300	16800 38200	0,8 1,0	260 260	11 ½“ 14“	3600 3000
Periflex® VN 430	VN 43014 VN 43024	1400 2000	4200 4800	700 1000	0,9	660 1700	8200 20800	0,8 1,0	494 494	14“ 18“	3000 2400
Periflex® VN 433	VN 43314 VN 43324	2300 3150	6900 7500	1150 1550	0,8	1400 2870	21750 35200	0,8 1,0	520 520	14“ 18“	3000 2400
Periflex® VN 436	VN 43614 VN 43624	3600 5000	10800 12000	1800 2500	0,7	2300 4750	34300 53600	0,8 1,0	572 572	14“ 16“ 18“	3000 2600 2400
Periflex® VN 439	VN 43914 VN 43924	2300 4000	6900 7500	1150 2000	0,7	1750 3300	37500 60950	0,8 1,0	390 390	14“ 16“ 18“	3000 2600 2400
Periflex® VN 544	VN 54414 VN 54424	5700 8000	17000 19000	2900 4000	0,8	3100 7600	61000 104100	0,8 1,0	622 622	18“ 21“	2400 1800
Periflex® VN 549	VN 54914 VN 54924	7200 9000	15300 20000	3600 4500	0,8	6000 11250	81400 141500	0,8 1,0	650 650	18“ 21“	2400 1800
Periflex® VN 666	VN 66614 VN 66624	14400 20000	43200 48000	7200 10000	0,8	6100 15200	121500 235800	0,8 1,0	1100 1100	21“ 24“	1800 1500

PVP ECO SERIES RATINGS TABLE >

Coupling size	Tyre	Nominal torque	Max torque	Adm. alternating torque	Adm. radial displace-ment	Radial stiffness	Torsional stiffness	Relative damping	Adm. damping power	SAE connection	Max Speed
		T_{KN} Nm	T_{Kmax} 1) Nm	T_{KW} Nm	ΔK_r mm	$C_{r\ dyn}$ 4) N/mm	$C_{T\ dyn}$ 2) 4) Nm/rad	ψ 2) 4)	$P_{KV\ 60}$ 3) 5) W		n_{max} min^{-1}
Periflex® VP 433	VN 43314 VN 43324	4600 6300	13800 15000	2300 3100	0,8	2800 5740	43500 70400	0,8 1,0	1040 1040	18“	2400
Periflex® VP 436	VN 43614 VN 43624	7200 10000	21600 24000	3600 5000	0,7	4600 9500	68600 107200	0,8 1,0	1140 1140	18“	2400
Periflex® VP 439	VN 43914 VN 43924	4600 8000	13800 15000	2300 4000	0,7	3500 6600	75000 121900	0,8 1,0	780 780	18“	2400
Periflex® VP 544	VN 54414 VN 54424	11400 16000	34000 38000	5800 8000	0,8	6200 15200	122000 208000	0,8 1,0	1240 1240	21“	1800
Periflex® VP 549	VN 54914 VN 54924	14400 18000	30600 40000	7200 9500	0,8	12000 22500	162800 282900	0,8 1,0	1300 1300	21“	1800
Periflex® VP 666	VN 66614 VN 66624	28800 40000	86400 96000	14400 20000	0,8	12200 30400	243000 471500	0,8 1,0	2200 2200	24“	1500

1) The values listed in the tables refer to the disc tyre characteristics.
2) For: $T_W = 0.2 \bullet T_{KN}$; $T = 0.8 \bullet T_{KN}$; f = 10 Hz; = 30 °C
3) This value must be reduced by the temperature factor when the coupling temperatures are higher than 30 °C.
4) Tolerances on the materials may be as high as ±15%.

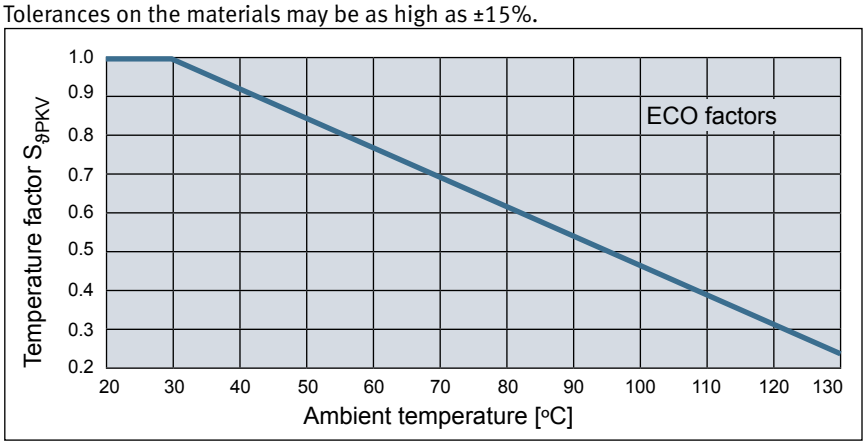

5) The $P_{KV\ 60}$ value represents the damping power that can be absorbed over a period of 60 minutes. The damping power that can be absorbed permanently is $P_{KV\infty} = 0.5 \bullet P_{KV\ 60}$.

GKN STROMAG PERIFLEX® VN...G SERIES >

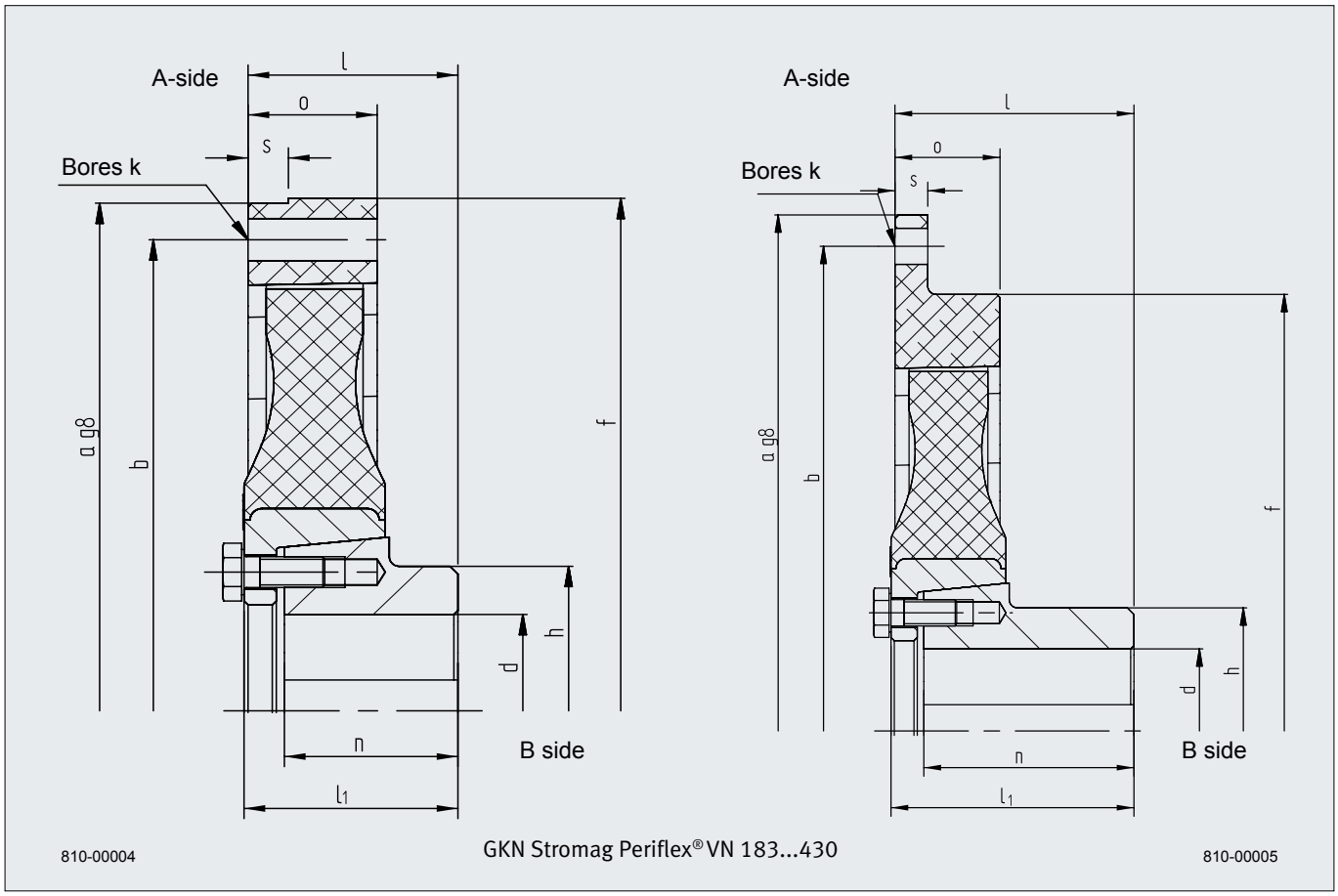

Size		Periflex® VN 183			Periflex® VN 230		Periflex® VN 280		Periflex® VN 283		Periflex® VN 350		Periflex® VN 358		Periflex® VN 430	
Tyre		VN 18311 VN 18331 VN 18321 VN 18341 VN 18351			VN 23011 VN 23031 VN 23021 VN 23041 VN 23051		VN 28011 VN 28031 VN 28021 VN 28041 VN 28051		VN 28311 VN 28331 VN 28321 VN 28341 VN 28351		VN 35011 VN 35031 VN 35021 VN 35041 VN 35051		VN 35811 VN 35831 VN 35821 VN 35841 VN 35851		VN 43011 VN 43031 VN 43021 VN 43041 VN 43051	
SAE connection		6½"	7½"	8"	8"	10"	10"	11½"	10"	11½"	11½"	14"	11½"	14"	14"	18"
Diameter mm	a	215,9	241,3	263,5	263,5	314,4	314,4	352,4	314,4	352,4	352,4	466,7	352,4	466,7	466,7	571,5
	b	200	222,3	244,5	244,5	295,3	295,3	333,4	295,3	333,4	333,4	438,2	333,4	438,2	438,2	542,9
	d_{max}	45	45	45	50	50	60	60	70	70	85	85	95	95	95	95
	f	218	218	218	266	266	316	316	316	316	355	355	355	355	468	468
	h	70	70	70	75	75	90	90	98	98	119	119	132	132	132	132
Bore k mm		6x9	8x9	6x11	6x11	8x11	8x11	8x11	8x11	8x11	8x11	8x13,5	8x11	8x13,5	8x13,5	6x17,5
Lengths mm	l 1)	40	40	52	52	72,8	72,8	106,6	72,8	106,6	106,6	92,4	106,6	92,4	92,4	82,7
	l_1	45	45	57	53	74	76	110	–*	–*	–*	–*	–*	–*	–*	–*
	n	35	35	47	43	64	65	99	82	105	105	105	105	105	105	105
	o	25	25	25	32	32	40	40	40	40	55	55	55	55	54	80
	s	8	8	8	10	10	10	10	10	10	10	12	10	12	15	20
Mass moment of inertia kg m²	J_A side	0,0076	0,0103	0,0134	0,0203	0,0329	0,0429	0,0574	0,0485	0,0625	0,0818	0,2033	0,0842	0,1915	0,2945	0,7205
	J_B side2)	0,0036	0,0036	0,0038	0,0079	0,0083	0,0186	0,0199	0,0235	0,0245	0,0547	0,0546	0,0855	0,0849	0,1265	0,1255
Mass kg2)		2,7	2,59	3,3	4,2	5,2	7,0	8,5	7,6	8,9	13,4	15,7	15,8	17,7	19,8	26,4

*) Dim l_1 not applicable on this version
1) Dim. l can be modified by moving the connection ring within specified tolerances
2) at max. bore d

PERIFLEX®VN...G SERIES >

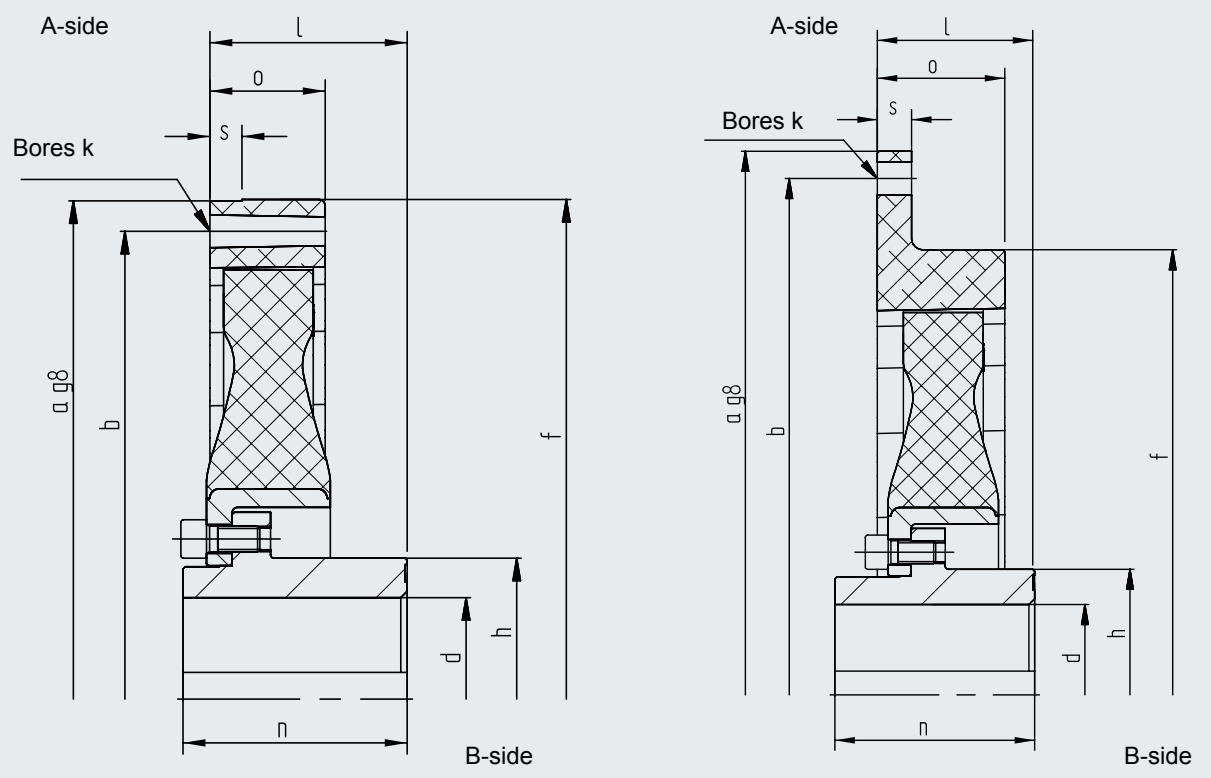

810-00000 GKN Stromag Periflex®VN 283...726 810-00001

Size		Periflex® VN 433		Periflex® VN 436			Periflex® VN 439			Periflex® VN 544		Periflex® VN 549		Periflex® VN 666		Periflex® VN 726
Tyre		VN 43311 VN 43331 VN 43321 VN 43341 VN 43351		VN 43611 VN 43631 VN 43621 VN 43641 VN 43651			VN 43911 VN 43931 - VN 43941 VN 43951			VN 54411 VN 54431 VN 54421 VN 54441 VN 54451		VN 54911 VN 54931 VN 54921 VN 54941 VN 54951		VN 66611 VN 66631 VN 66621 VN 66641 VN 66651		VN 72611 VN 72631 VN 72621 VN 72641 VN 72651
SAE connection		14“	18“	14“	16“	18“	14“	16“	18“	18“	21“	18“	21“	21“	24“	24“
Diameter mm	a	466,7	571,5	466,7	517,5	571,5	466,7	517,5	571,5	571,5	673,1	571,5	673,1	673,1	733,4	733,4
	b	438,2	542,9	438,2	489	542,9	438,2	489	542,9	542,9	641,4	542,9	641,4	641,4	692,2	692,2
	d_{max}	110	110	120	120	120	130	130	130	160	160	180	180	190	190	250
	f	468	468	468	468	468	–	455	455	572	572	572	572	692	692	761
	h	154	154	168	168	168	185	185	185	225	225	300	300	270	270	350
Bore k mm		8x13,5	6x17,5	8x13,5	8x13,5	6x17,5	8x13,5	8x13,5	6x17,5	12x17,5	12x17,5	12x17,5	12x17,5	12x17,5	12x20	24x20
Lengths mm	l 1)	92,4	82,7	92,4	130,7	130,7	92,4	130,7	130,7	130,7	140	130,7	140	213	213	295
	l_1	–*	–*	–*	135	135	–*	–*	–*	–*	–*	–*	–*	–*	–*	–*
	n	105	105	105	130	130	105	130	130	130	130	130	150	190	190	260
	o	80	80	80	80	80	65	70	70	90	140	90	140	142	142	174
	s	15	20	15	20	20	8	25	25	20	25	15	25	15	31	16
Mass moment of inertia kg m²	J_A side	0,353	0,679	0,375	0,528	0,701	0,253	0,512	0,748	1,023	2,254	1,009	2,055	3,608	4,208	4,865
	J_B side2)	0,230	0,229	0,306	0,320	0,320	0,315	0,333	0,333	0,890	0,852	1,299	1,324	2,578	2,578	6,296
Mass kg2)		28,7	33,4	33,4	38,4	40,7	30,9	38,8	42	62,2	75,6	77,2	91,7	131,5	136,3	213,8

*) Dim l_1 not applicable on this version
1) Dim. l can be modified by moving the connection ring within specified tolerances
2) at max. bore d

GKN STROMAG PERIFLEX® VN...G/ON SERIES >

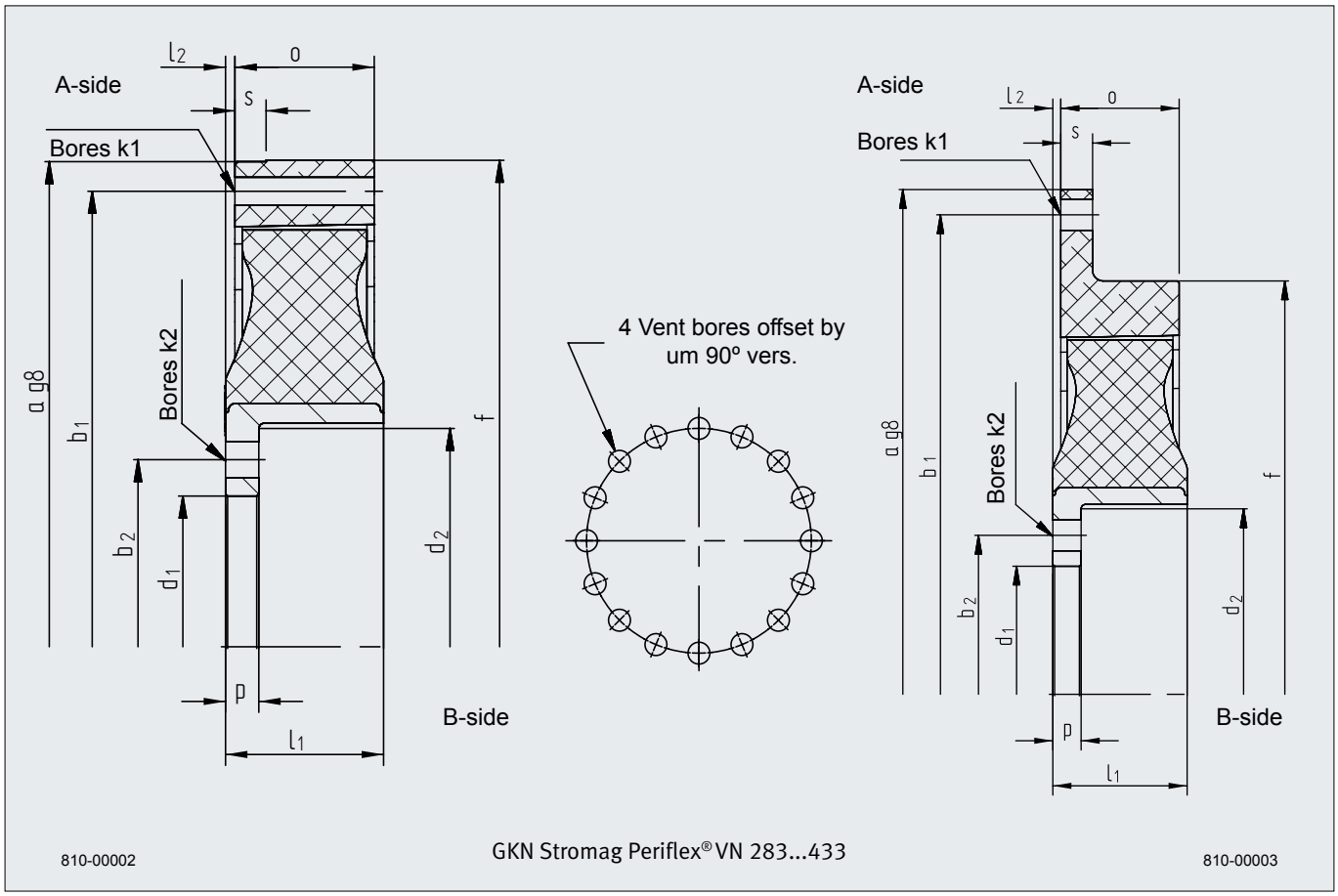

Size		Periflex® VN 283		Periflex® VN 350		Periflex® VN 358		Periflex® VN 430		Periflex® VN 433	
Tyre		VN 28311 VN 28331 VN 28321 VN 28341 VN 28351		VN 35011 VN 35031 VN 35021 VN 35041 VN 35051		VN 35811 VN 35831 VN 35821 VN 35841 VN 35851		VN 43011 VN 43031 VN 43021 VN 43041 VN 43051		VN 43311 VN 43331 VN 43321 VN 43341 VN 43351	
SAE connection		10“	11½“	11½“	14“	11½“	14“	14“	18“	14“	18“
Diameter mm	a	314,4	352,4	352,4	466,7	352,4	466,7	466,7	571,5	466,7	571,5
	b_1	295,3	333,4	333,4	438,2	333,4	438,2	438,2	542,9	438,2	542,9
	b_2	117	117	140	140	150	150	150	150	180	180
	d_1	95	95	115	115	125	125	125	125	145	145
	d_2	133	133	165	165	205	205	175	175	210	210
	f	316	316	355	355	355	355	468	468	468	468
Bore mm	k_1	8x11	8x11	8x11	8x13,5	8x11	8x13,5	8x13,5	6x17,5	8x13,5	6x17,5
	k_2	16x11	16x11	16x13,5	16x13,5	20x13,5	20x13,5	20x13,5	20x13,5	16x17,5	16x17,5
Lengths mm	l_1	40	40	44	44	48	48	58	58	76	76
	l_2	–	–	–	–	–	–	–	–	4,5	4,5
	o	40	40	55	55	55	55	54	67	80	80
	p	10	10	12	12	12	12	12	12	16	16
	s	10	10	10	12	10	12	15	18	15	18
Mass moment of inertia kg m²	J_A side	0,0485	0,0625	0,0998	0,2030	0,1000	0,2010	0,2905	0,6345	0,419	0,747
	J_B side	0,0172	0,0172	0,0365	0,0365	0,0584	0,0584	0,1005	0,1005	0,182	0,182
Mass kg		4,8	5,38	7,0	9,4	9,0	11,4	13,1	18,5	19,8	24,0

GKN STROMAG PERIFLEX® VN...G/ON SERIES >

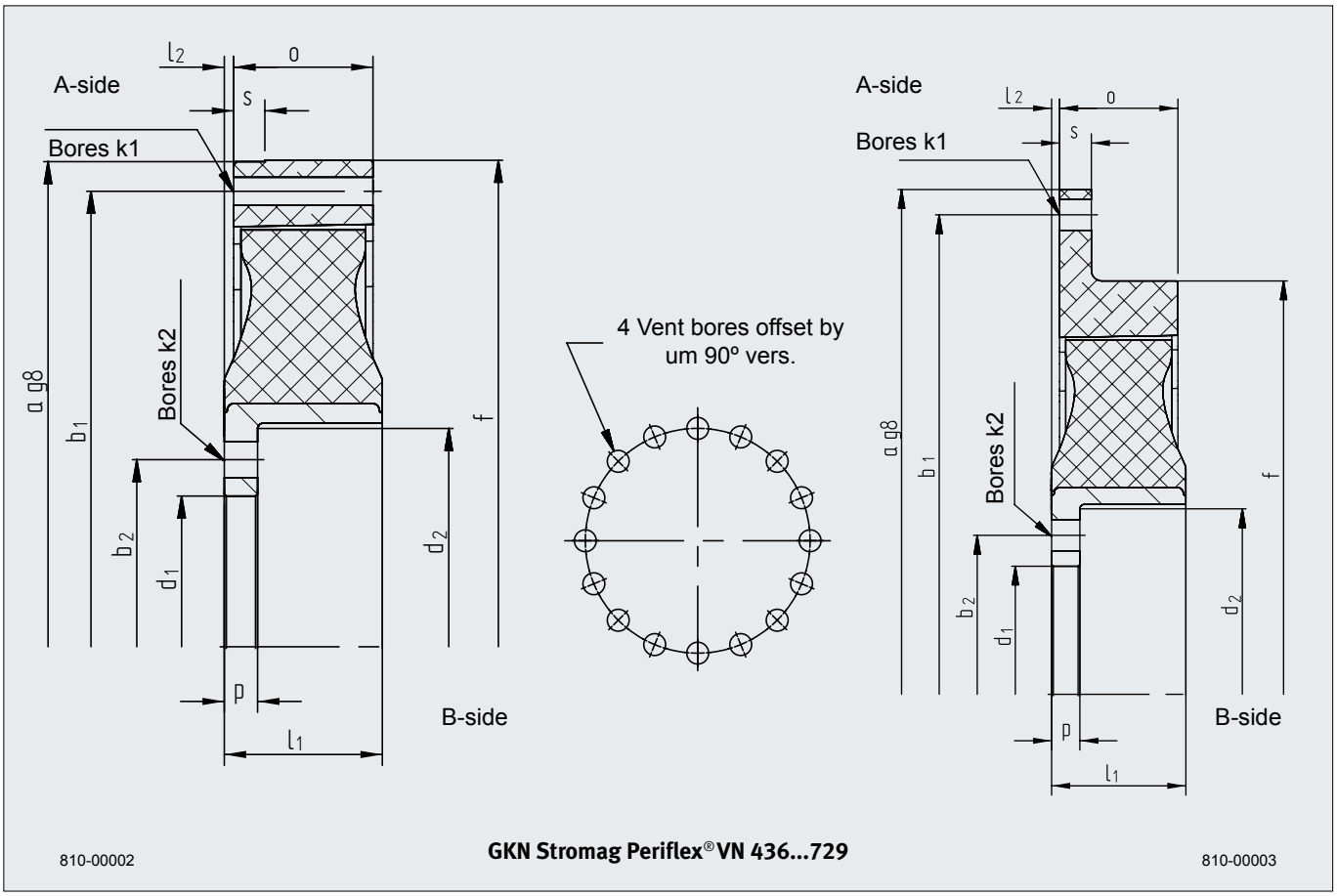

Size		Periflex® VN 436			Periflex® VN 439			Periflex® VN 544		Periflex® VN 549		Periflex® VN 666		Periflex® VN 726
Tyre		VN 43611 VN 43631 VN 43621 VN 43641 VN 43651			VN 43911 VN 43931 VN 43941 VN 43951			VN 54411 VN 54431 VN 54421 VN 54441 VN 54451		VN 54911 VN 54931 VN 54921 VN 54941 VN 54951		VN 66611 VN 66631 VN 66621 VN 66641 VN 66651		VN 72611 VN 72631 VN 72621 VN 72641 VN 72651
SAE connection		14“	16“	18“	14“	16“	18“	18“	21“	18“	21“	21“	24“	24“
Diameter mm	a	466,7	517,5	571,5	466,7	517,5	571,5	571,5	673,1	571,5	673,1	673,1	733,4	733,4
	b_1	438,2	489	542,9	438,2	489	542,9	542,9	641,4	542,9	641,4	641,4	692,2	692,2
	b_2	190	190	190	220	220	220	270	270	270	270	320	320	398
	d_1	155	155	155	185	185	185	230	230	230	230	275	275	330
	d_2	220	220	220	250	250	250	296	296	300	300	364	364	42
	f	468	468	468	464	455	455	572	572	572	572	692	692	761
Bore mm	k_1	8x13,5	8x13,5	6x17,5	8x13,5	8x13,5	6x17,5	12x17,5	12x17,5	12x17,5	12x17,5	12x17,5	12x20	24x20
	k_2	20x17,5	20x17,5	20x17,5	12x22	12x22	12x22	24x17,5	24x17,5	24x22	24x22	24x22	24x22	30x21*
Lengths mm	l_1	90	90	90	63	63	63	100	100	87,5	87,5	126,5	126,5	150
	l_2	5,0	5,0	5,0	–	–	–	5,0	5,0	–	–	–	–	–
	o	80	80	80	65	70	70	90	140	90	140	142	142	174
	p	16	16	16	18	18	18	22	22	22,5	22,5	30	30	36
	s	15	20	20	8	25	25	20	25	20	25	15	31	16
Mass moment of inertia kg m²	J_A side	0,442	0,579	0,753	0,253	0,512	0,748	1,095	2,155	1,101	2,161	3,608	4,095	4,865
	J_B side	0,243	0,243	0,243	0,202	0,202	0,202	0,560	0,560	0,742	0,742	1,703	1,703	3,616
Mass kg		23,9	26,3	28,5	16,35	21,4	24,6	36,2	48,2	40,1	52,1	77,1	80,9	107,5

*) contains 2 vent. bores

GKN STROMAG PERIFLEX® VN...S SERIES >

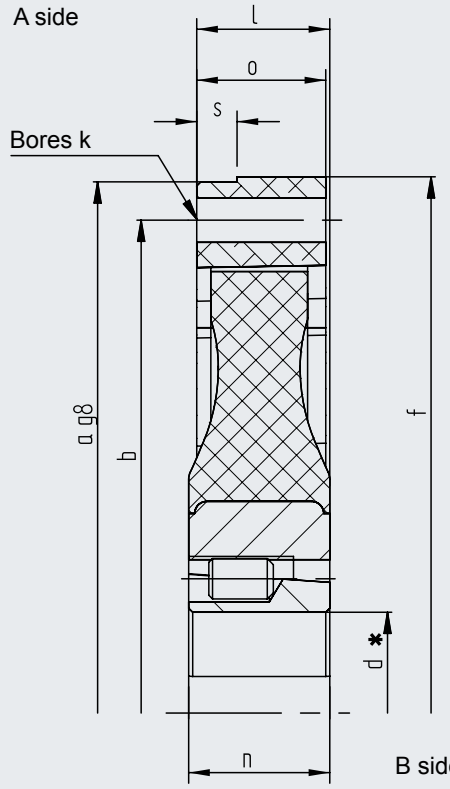

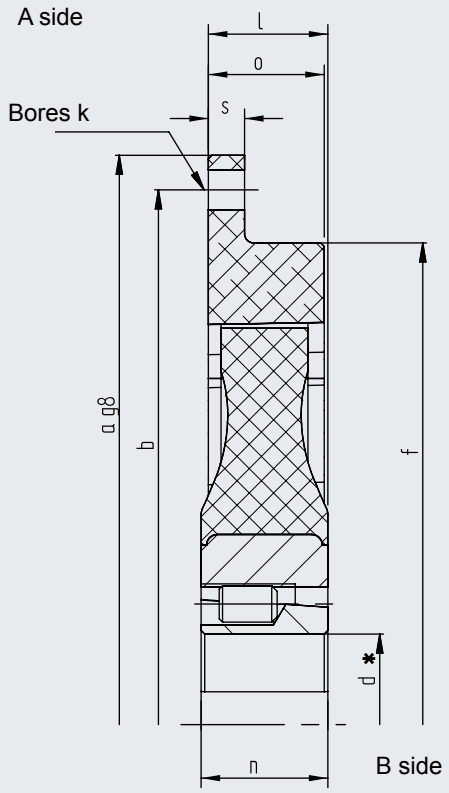

810-00010 GKN Stromag Periflex® VN 183...358 810-00011

Size		Periflex® VN 183			Periflex® VN 230		Periflex® VN 280		Periflex® VN 283		Periflex® VN 350		Periflex® VN 358	
Tyre		VN 18311 VN 18331 VN 18321 VN 18341 VN 18351			VN 23011 VN 23031 VN 23021 VN 23041 VN 23051		VN 28011 VN 28031 VN 28021 VN 28041 VN 28051		VN 28311 VN 28331 VN 28321 VN 28341 VN 28351		VN 35011 VN 35031 VN 35021 VN 35041 VN 35051		VN 35811 VN 35831 VN 35821 VN 35841 VN 35851	
SAE connection		6½“	7½“	8“	8“	10“	10“	11½“	10“	11½“	11½“	14“	11½“	14“
Clamping bush		2012	2012	2012	2012	2012	2517	2517	3020	3020	3020	3020	3525	3525
Diameter mm	a	215,9	241,3	263,5	263,5	314,4	314,4	352,4	314,4	352,4	352,4	466,7	352,4	466,7
	b	200	222,3	244,5	244,5	295,3	295,3	333,4	295,3	333,4	333,4	438,2	333,4	438,2
	d*	50	50	50	50	50	60	60	75	75	75	75	95	95
	f	218	218	218	266	266	316	316	316	316	355	355	355	355
Bore k mm		6x9	8x9	6x11	6x11	8x11	8x11	8x11	8x11	8x11	8x11	8x13,5	8x11	8x13,5
Lengths mm	l 1)	30	30	30	34	34	44	41,5	51	51	56,5	56,5	67	67
	n	31,8	31,8	31,8	31,8	31,8	45	45	51	51	51	51	64	64
	o	25	25	25	32	32	40	40	40	40	55	55	55	55
	s	8	8	8	10	10	10	10	10	10	10	12	10	12
Mass moment of inertia kg m²	J_A-side	0,0076	0,0103	0,0134	0,0203	0,0329	0,0483	0,0621	0,0485	0,0625	0,0818	0,2030	0,0842	0,2040
	J_B-side	0,0032	0,0032	0,0032	0,0076	0,0076	0,0166	0,0166	0,0235	0,0235	0,0559	0,0559	0,1143	0,1220
Mass kg		2,29	2,59	2,78	3,97	4,97	5,67	6,1	6,6	7,2	11,2	14,2	16,4	20,3

d* max. bore of the taper lock bushing
1) Dim. l can be modified by moving the connection ring within specified tolerances

GKN STROMAG PERIFLEX® VN...S SERIES >

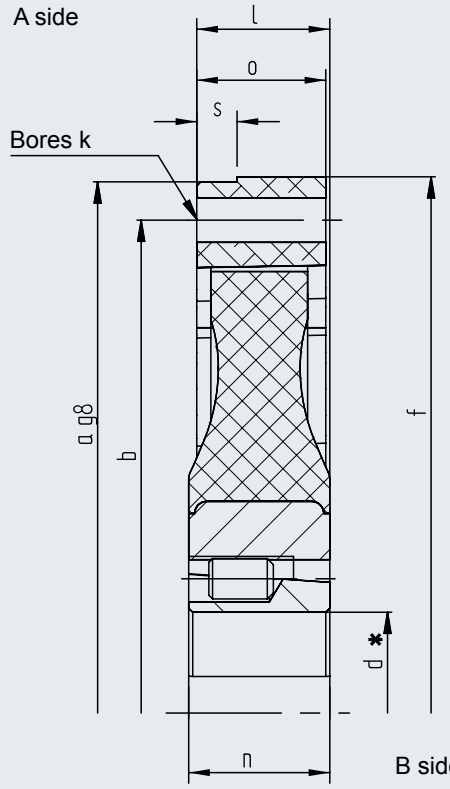

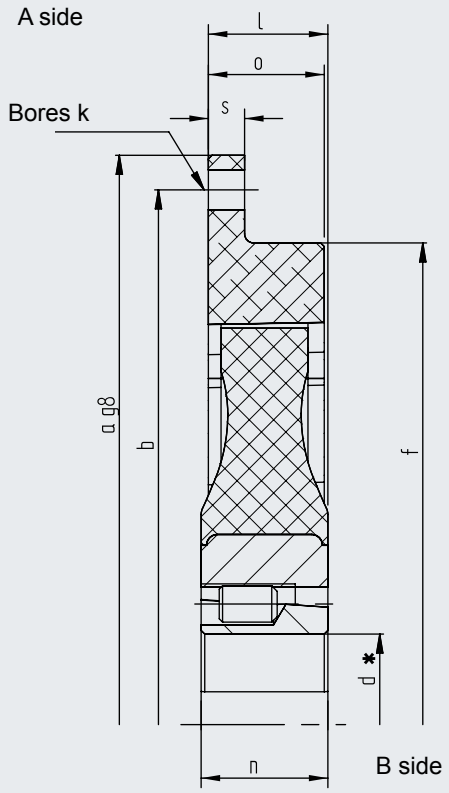

810-00010 GKN Stromag Periflex® VN 430...544 810-00011

Size		Periflex® VN 430		Periflex® VN 433		Periflex® VN 436			Periflex® VN 544	
Tyre		VN 43011 VN 43031 VN 43021 VN 43041 VN 43051		VN 43311 VN 43331 VN 43321 VN 43341 VN 43351		VN 43611 VN 43631 VN 43621 VN 43641 VN 43651			VN 54411 VN 54431 VN 54421 VN 54441 VN 54451	
SAE connection		14“	18“	14“	18“	14“	16“	18“	18“	21“
Clamping bush		3535	3535	4030	4030	4535	4535	4535	5040	5040
Diameter mm	a	466,7	571,5	466,7	571,5	466,7	517,5	571,5	571,5	673,1
	b	436,2	542,9	438,2	542,9	438,2	489	542,9	542,9	641,4
	d*	90	90	110	110	125	125	125	125	125
	f	468	468	468	468	468	468	468	572	572
Bore k mm		8x13,5	6x17,5	8x13,5	6x17,5	8x13,5	8x13,5	6x17,5	12x17,5	12x17,5
Lengths mm	l 1)	87,5	100	78	78	85	85	85	99,5	99,5
	n	89	89	76	76	90	90	90	102	102
	o	54	80	80	80	80	80	80	105	140
	s	15	20	15	20	15	20	20	20	25
Mass moment of inertia kg m²	J_A side	0,2905	0,7205	0,419	0,747	0,442	0,579	0,753	1,235	2,254
	J_B side	0,1425	0,1425	0,264	0,264	0,356	0,356	0,356	1,086	1,086
Mass kg		20,7	27,7	30,6	35,5	36	38,4	40,6	73,0	84,9

d* max. bore of the taper lock bushing
1) Dim. l can be modified by moving the connection ring within specified tolerances

GKN STROMAG PERIFLEX® VN...R SERIES >

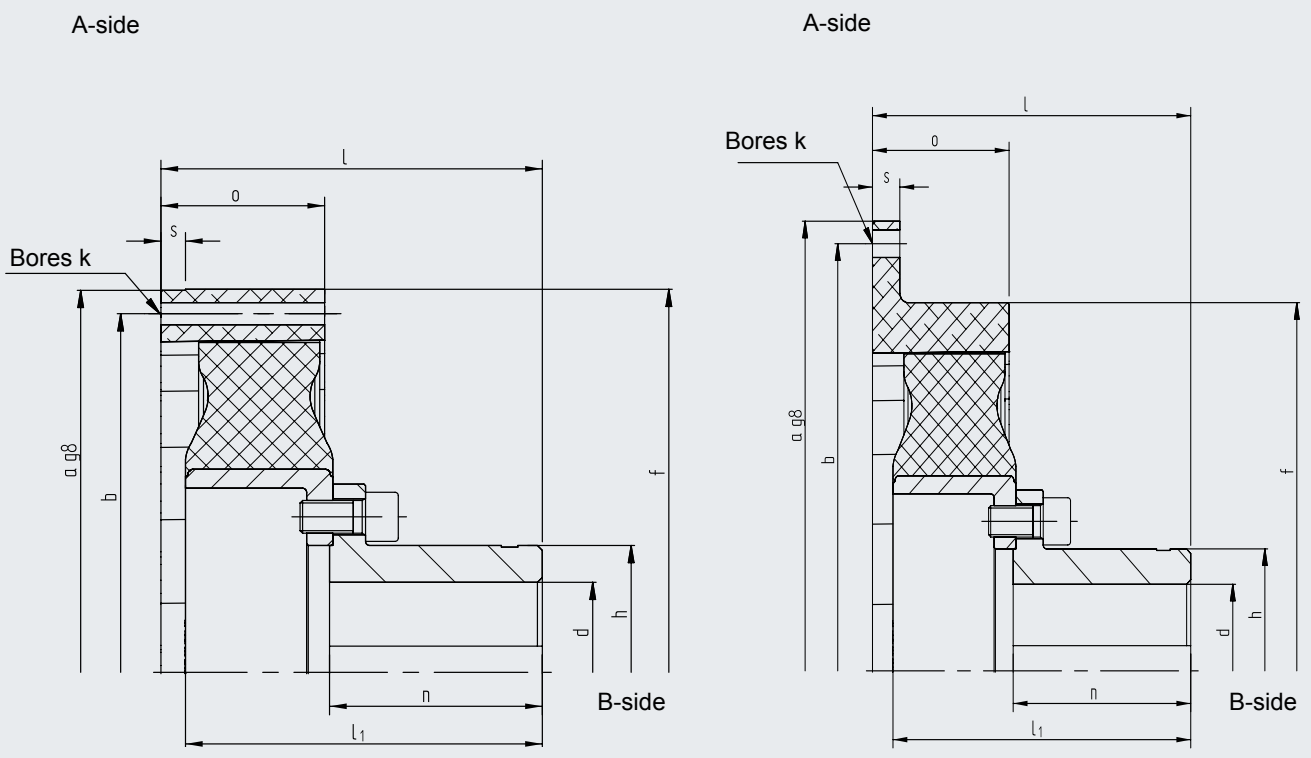

810-00006 GKN Stromag Periflex® VN 183...430 810-00007

Size		Periflex® VN 183			Periflex® VN 230		Periflex® VN 280		Periflex® VN 283		Periflex® VN 350		Periflex® VN 358		Periflex® VN 430	
Tyre		VN 18311 VN 18331 VN 18321 VN 18341 VN 18351			VN 23011 VN 23031 VN 23021 VN 23041 VN 23051		VN 28011 VN 28031 VN 28021 VN 28041 VN 28051		VN 28311 VN 28331 VN 28321 VN 28341 VN 28351		VN 35011 VN 35031 VN 35021 VN 35041 VN 35051		VN 35811 VN 35831 VN 35821 VN 35841 VN 35851		VN 43011 VN 43031 VN 43021 VN 43041 VN 43051	
SAE connection		6½“	7½“	8“	8“	10“	10“	11½“	10“	11½“	11½“	14“	11½“	14“	14“	18“
Diameter mm	a	215,9	241,3	263,5	263,5	314,4	314,4	352,4	314,4	352,4	352,4	466,7	352,4	466,7	466,7	571,5
	b	200	222,3	244,5	244,5	295,3	295,3	333,4	295,3	333,4	333,4	438,2	333,4	438,2	438,2	542,9
	d_{max}	43	43	43	50	50	55	55	65	65	80	80	85	85	85	85
	f	218	218	218	266	266	316	316	316	316	355	355	355	355	468	468
	h	61	61	61	70	70	75	75	90	90	112	112	120	120	120	120
Bore k mm		6x9	8x9	6x11	6x11	8x11	8x11	8x11	8x11	8x11	8x11	8x13,5	8x11	8x13,5	8x13,5	6x17,5
Lengths mm	l 1)	108	108	108	113	113	125	125	158	158	160	160	170	170	178	178
	l_1	93	93	93	98	98	110	110	156	156	147	147	164	164	161	161
	n	60	60	60	65	65	70	70	105	105	105	105	105	105	105	105
	o	45	45	45	48,5	48,5	55	55	55	40	55	55	55	55	80	80
	s	8	8	8	10	10	10	10	10	10	10	10	10	12	15	20
Mass moment of inertia kg m²	J_A side	0,0125	0,0429	0,0539	0,0286	0,097	0,0617	0,1421	0,0634	0,0625	0,0998	0,1980	0,1028	0,2063	0,3925	0,7205
	J_B side 2)	0,0036	0,0036	0,0036	0,008	0,008	0,0173	0,0173	0,0248	0,0248	0,0533	0,0533	0,0870	0,0870	0,1225	0,1225
Mass kg 2)		3,3	4,75	5,8	4,8	7,8	7,2	10,0	9,1	9,9	13,1	15,5	16,5	18,9	21,4	26,3

1) Dim. l can be modified by moving the connection ring within specified tolerances
2) at max. bore d

GKN STROMAG PERIFLEX® VN...R SERIES >

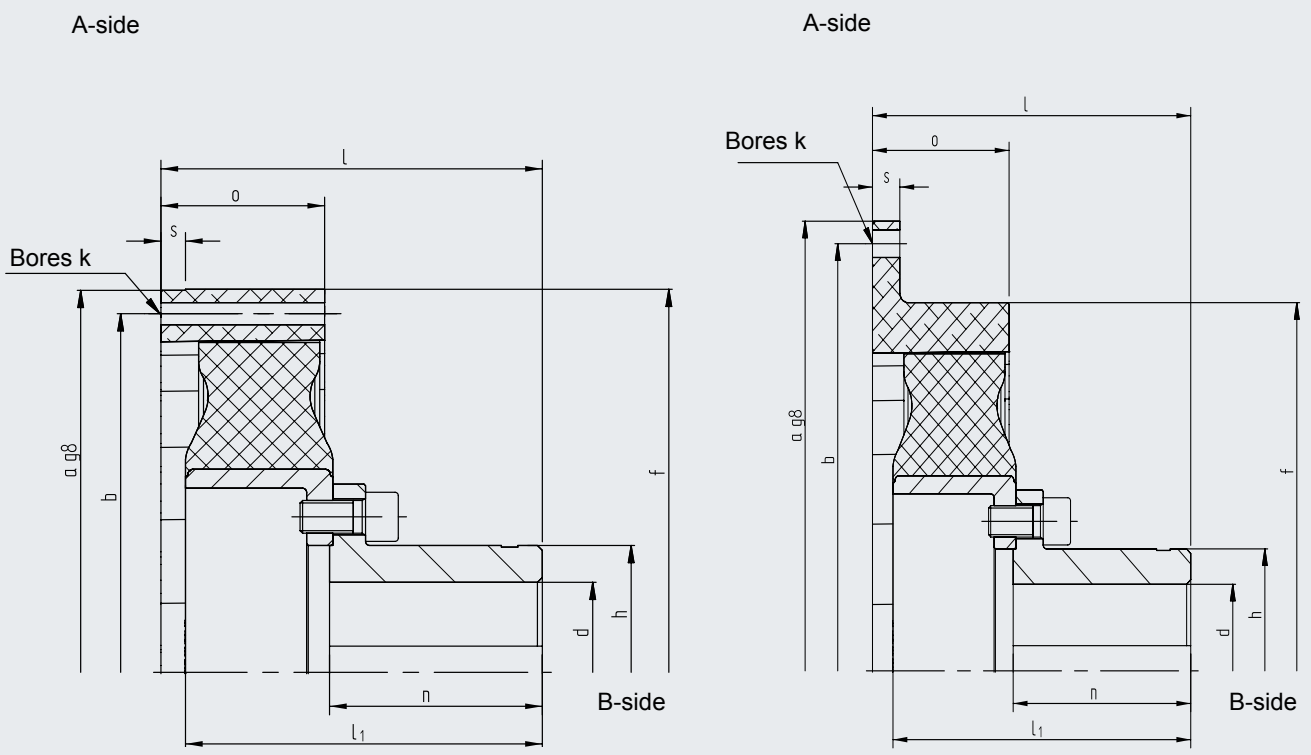

810-00006 GKN Stromag Periflex® VN 433...726 810-00007

Size		Periflex® VN 433		Periflex® VN 436			Periflex® VN 439			Periflex® VN 544		Periflex® VN 549		Periflex® VN 666		Periflex® VN 726
Tyre		VN 43311 VN 43331 VN 43321 VN 43341 VN 43351		VN 43611 VN 43631 VN 43621 VN 43641 VN 43651			VN 43911 VN 43931 VN 43941 VN 43951			VN 54411 VN 54431 VN 54421 VN 54441 VN 54451		VN 54911 VN 54931 VN 54921 VN 54941 VN 54951		VN 66611 VN 66631 VN 66621 VN 66641 VN 66651		VN 72611 VN 72631 VN 76221 VN 76241 VN 72651
SAE connection		14“	18“	14“	16“	18“	14“	16“	18“	18“	21“	18“	21“	21“	24“	24“
Diameter mm	a	466,7	571,5	466,7	517,5	571,5	466,7	517,5	571,5	571,5	673,1	571,5	673,1	673,1	733,4	733,4
	b	438,2	542,9	438,2	489	542,9	438,2	489	542,9	542,9	641,4	542,9	641,4	641,4	692,2	692,2
	d_{max}	100	100	110	110	110	130	130	130	160	160	150	150	190	190	250
	f	468	468	468	468	468	468	455	455	572	572	572	572	692	692	761
	h	145	145	155	155	155	182	182	182	225	225	220	220	270	270	350
Bore k mm		8x13,5	6x17,5	8x13,5	8x13,5	6x17,5	8x13,5	8x13,5	6x17,5	12x17,5	12x17,5	12x17,5	12x17,5	12x17,5	12x20,0	24x20,0
Lengths mm	l 1)	209	209	233	233	233	207	227	227	319,5	319,5	307	307	325	325	427
	l_1	199	199	218	218	218	188	208	208	306	306	293,5	293,5	310	310	404
	n	125	125	130	130	130	130	150	150	210	210	210	210	190	190	260
	o	80	80	100	100	100	105	120	120	105	105	105	105	142	142	174
	s	15	20	15	20	20	15	25	25	15	25	20	25	15	31	16
Mass moment of inertia kg m²	J_A side	0,419	0,747	0,522	0,661	0,850	0,569	0,686	0,922	1,235	1,917	1,241	1,923	3,608	4,208	4,865
	J_B side2)	0,241	0,241	0,320	0,320	0,320	0,342	0,342	0,342	1,024	1,024	1,162	1,162	2,623	2,623	6,447
Mass kg2)		32,2	37,1	38,6	41,0	43,5	39,9	43,9	47,1	78,6	51,2	80,6	88,2	133,2	138,0	218,0

1) Dim. l can be modified by moving the connection ring within specified tolerances
2) at max. bore d

GKN STROMAG PERIFLEX®VN...R/ON SERIES >

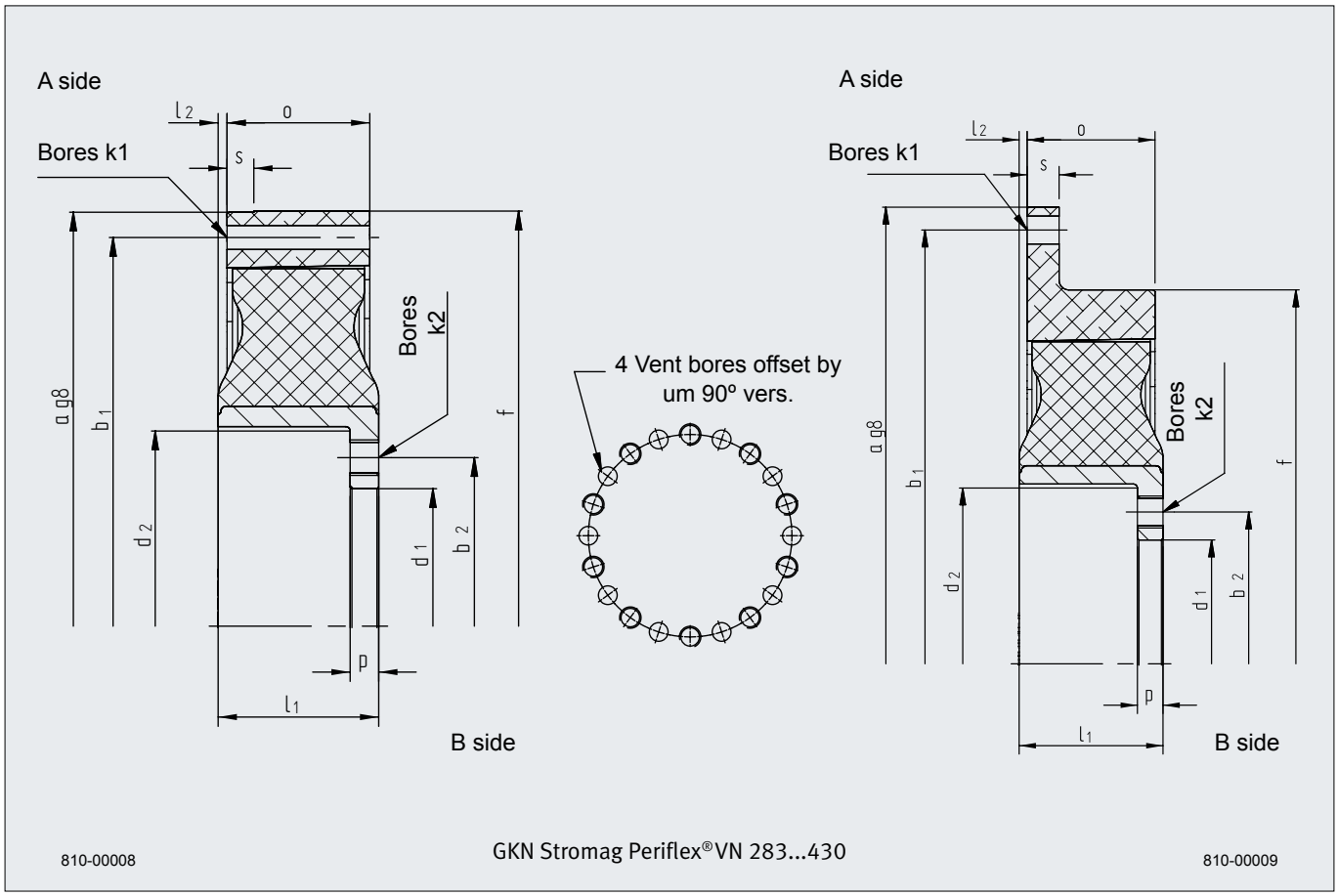

Size		Periflex® VN 283		Periflex® VN 350		Periflex® VN 358		Periflex® VN 430	
Tyre		VN 28311 VN 28331 VN 28321 VN 28341 VN 28351		VN 35011 VN 35031 VN 35021 VN 35041 VN 35051		VN 35811 VN 35831 VN 35821 VN 35841 VN 35851		VN 43011 VN 43031 VN 43021 VN 43041 VN 43051	
SAE connection		10“	11½“	11½“	14“	11½“	14“	14“	18“
Diameter mm	a	314,4	352,4	352,4	466,7	352,4	466,7	466,7	571,5
	b_1	295,3	333,4	333,4	438,2	333,4	438,2	438,2	542,9
	b_2	117	117	140	140	150	150	150	150
	d_1	95	95	115	115	125	125	125	125
	d_2	140	140	170	170	175	175	180	180
	f	316	316	355	355	355	355	468	468
Bore mm k_1		8x11	8x11	8x11	8x13,5	8x11	8x13,5	8x13,5	6x17,5
k_2		8xM14	8xM14	12xM16	12xM16	10xM16*	10xM16*	10xM16	10xM16
Lengths mm	l_1	40	40	44	44	48	48	58	58
	l_2	–	–	–	–	–	–	–	–
	o	40	40	55	55	55	55	70	70
	p	10	10	12	12	12	12	12	12
	s	10	10	10	12	10	12	15	18
Mass moment of inertia kg m²	J_A side	0,0485	0,0630	0,0970	0,1980	0,1000	0,2010	0,3545	0,6345
	J_B side	0,0172	0,0172	0,0365	0,0365	0,0580	0,5800	0,1005	0,1005
Mass kg		4,8	5,4	7,6	10,0	9,0	11,4	14,4	18,5

*) contains 5 vent bores

GKN STROMAG PERIFLEX® VN...R/ON SERIES >

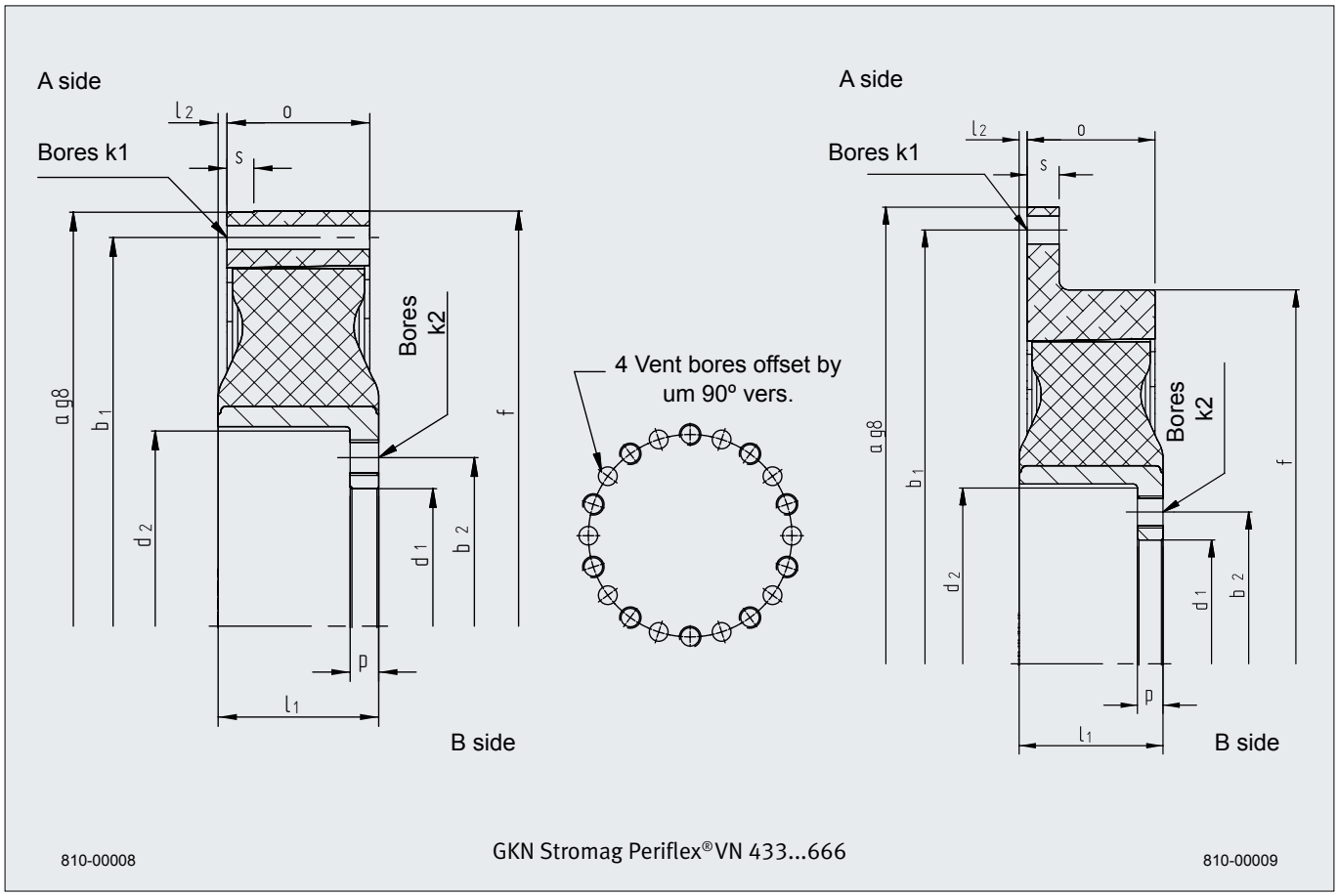

Size		Periflex® VN 433		Periflex® VN 436			Periflex® VN 439			Periflex® VN 544		Periflex® VN 549		Periflex® VN 666		Periflex® VN 726
Tyre		VN 43311 VN 43331 VN 43321 VN 43341 VN 43351		VN 43611 VN 43631 VN 43621 VN 43641 VN 43651			VN 43911 VN 43931 VN 43941 VN 43951			VN 54411 VN 54431 VN 54421 VN 54441 VN 54451		VN 54911 VN 54931 VN 54921 VN 54941 VN 54951		VN 66611 VN 66631 VN 66621 VN 66641 VN 66651		VN 72611 VN 72631 VN 72621 VN 72641 VN 72651
SAE connection		14“	18“	14“	16“	18“	14“	16“	18“	18“	21“	18“	21“	21“	24“	24“
Diameter mm	a	466,7	571,5	466,7	517,5	571,5	466,7	517,5	571,5	571,5	673,1	571,5	673,1	673,1	733,4	733,4
	b_1	438,2	542,9	438,2	489	542,9	438,2	489	542,9	542,9	641,4	542,9	641,4	641,4	692,2	692,2
	b_2	180	180	190	190	190	220	220	220	270	270	270	270	320	320	398
	d_1	145	145	155	155	155	185	185	185	230	230	230	230	275	275	330
	d_2	215	215	230	230	230	253	253	253	310	310	310	310	364	364	442
	f	468	468	468	468	468	468	455	455	572	572	572	572	692	692	761
Bore mm	k_1	8x13,5	6x17,5	8x13,5	8x13,5	6x17,5	8x13,5	8x13,5	6x17,5	12x17,5	12x17,5	12x17,5	12x17,5	12x17,5	12x20,0	24x20
	k_2	12xM20	12xM20	10xM20	10xM20	10xM20	8xM20	8xM20	8xM20	20xM20	20xM20	12xM27	12xM27	20xM27	20xM27	28xM24*
Lengths mm	l_1	76	76	90	90	90	63	63	63	100	100	87,5	87,5	126,5	126,5	150
	l_2	–	–	–	–	–	–	–	–	–	–	–	–	–	–	–
	o	80	80	100	100	100	105	120	120	105	105	105	105	142	142	174
	p	16	16	16	16	16	18	18	18	22	22	22,5	22,5	30	30	36
	s	15	20	15	20	20	15	25	25	15	25	20	25	15	31	16
Mass moment of inertia kg m²	J_A side	0,421	0,732	0,522	0,661	0,850	0,569	0,686	0,922	1,235	1,917	1,241	1,923	3,608	4,208	4,865
	J_B side	0,182	0,182	0,243	0,243	0,243	0,202	0,202	0,202	0,560	0,560	0,742	0,742	1,703	1,703	3,796
Mass kg		20,6	25,2	25,5	26,9	31,2	23,1	25,1	28,3	37,7	45,1	41,5	49,0	77,1	81,9	112,1

*) contains 2 vent bores

GKN STROMAG PERIFLEX®VN...GB SERIES >

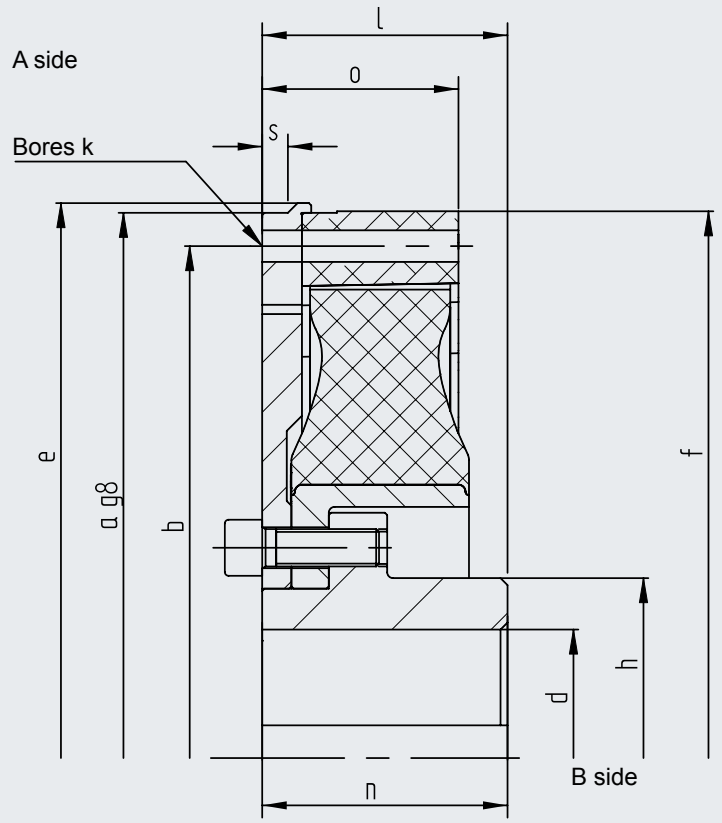

GKN Stromag Periflex®VN 283...433

810-00016

Size		Periflex®VN 283		Periflex®VN 350		Periflex®VN 358		Periflex®VN 430		Periflex®VN 433	
Tyre		VN 28311 VN 28331 VN 28321 VN 28341 VN 28351		VN 35011 VN 35031 VN 35021 VN 35041 VN 35051		VN 35811 VN 35831 VN 35821 VN 35841 VN 35851		VN 43011 VN 43031 VN 43021 VN 43041 VN 43051		VN 43311 VN 43331 VN 43321 VN 43341 VN 43351	
SAE connection		10“	11½“	11½“	14“	11½“	14“	14“	18“	14“	18“
Diameter mm	a	314,4	352,4	352,4	466,7	352,4	466,7	466,7	571,5	466,7	571,5
	b	295,3	333,4	333,4	438,2	333,4	438,2	438,2	542,9	438,2	542,9
	d_{max}	70	70	85	85	95	95	95	95	110	110
	e	316	360	360	475	360	475	475	580	475	–
	f	316	316	355	355	355	355	468	468	468	468
	h	98	98	119	119	132	132	132	132	154	154
Bore mm k_1 k_2		8x11	8x11	8x11	8x13,5	8x11	8x13,5	8x13,5	6x17,5	8x13,5	6x17,5
Lengths mm	l	82	105	105	105	105	105	105	105	105	105
	n	82	105	105	105	105	105	105	105	105	105
	o	52	52	56	56	67	67	67	67	84	84
	o_1	–	22	–	–	–	–	–	–	–	–
	s	7	7	7	12	7	12	8	13	11	15
Mass moment of inertia kg m²	J_A side	0,114	0,184	0,163	0,457	0,182	0,476	0,658	1,722	0,869	2,111
	J_B side[2)]	0,039	0,039	0,091	0,091	0,121	0,121	0,197	0,197	0,396	0,396
Mass kg[2)]		13,4	16,6	19,7	26,5	22,6	29,4	33,0	50,9	50,2	67,9

2) at max. bore d

GKN STROMAG PERIFLEX® VN...GB SERIES >

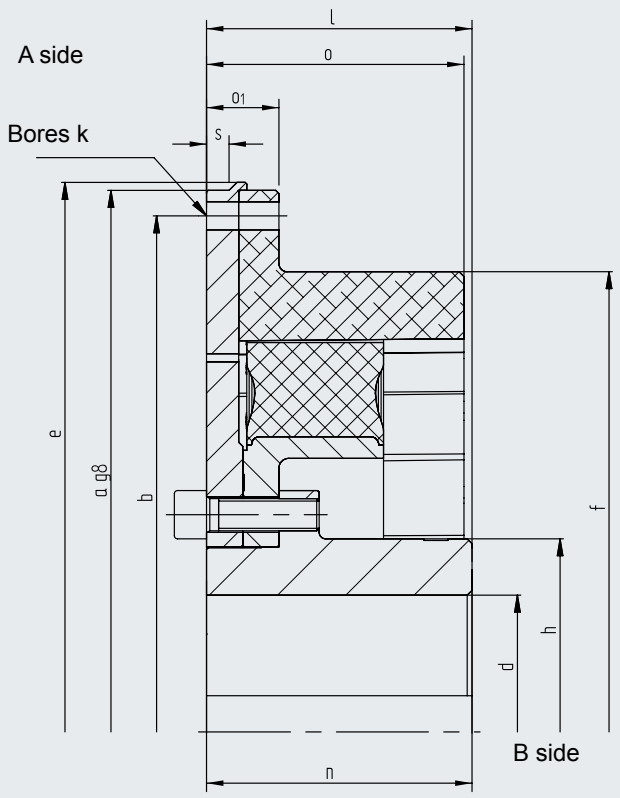

GKN Stromag Periflex® VN 436...726

810-00017

Size		Periflex® VN 436			Periflex® VN 439			Periflex® VN 544		Periflex® VN 549		Periflex® VN 666		Periflex® VN 726
Tyre		VN 43611 VN 43631 VN 43621 VN 43641 VN 43651			VN 43911 VN 43931 VN 43941 VN 43951			VN 54411 VN 54431 VN 54421 VN 54441 VN 54451		VN 54911 VN 54931 VN 54921 VN 54941 VN 54951		VN 66611 VN 66631 VN 66621 VN 66641 VN 66651		VN 72611 VN 72631 VN 72621 VN 72641 VN 72651
SAE connection		14“	16“	18“	14“	16“	18“	18“	21“	18“	21“	21“	24“	24“
Diameter mm	a	466,7	517,5	571,5	466,7	517,5	571,5	571,5	673,1	571,5	673,1	673,1	733,4	733,4
	b	438,2	489	542,9	438,2	489	542,9	542,9	641,4	542,9	641,4	641,4	692,2	692,2
	d_{max}	120	120	120	130	130	130	160	160	180	180	190	190	
	e	475	526	–	–	–	–	580	683	580	683	692	744	
	f	468	468	468	464	455	464	572	572	572	572	692	692	
	h	168	168	168	185	185	185	225	225	300	300	270	270	
Bore k mm		8x13,5	8x13,5	6x17,5	8x13,5	8x13,5	6x17,5	12x17,5	12x17,5	12x17,5	12x17,5	12x17,5	12x20,0	other dimensions on request
Lengths mm	l	130	130	130	105	130	130	130	165	130	165	190	190	
	n	130	130	130	105	130	130	130	165	130	165	190	190	
	o	100	100	100	85	91	85	125	160	125	160	164	164	
	o_1	–	40	–	–	–	–	–	45	–	45	–	57	
	s	15	15	15	15	15	15	14	14	14	14	12	12	
Mass moment of inertia kg m²	J_A side	0,965	1,596	2,419	0,851	1,565	2,414	2,222	4,876	2,228	4,882	5,845	7,676	
	J_B side[2)]	0,491	0,491	0,491	0,483	0,483	0,483	1,305	1,305	1,796	1,796	3,474	3,474	
Mass kg[2)]		58,4	71,8	82,2	53,3	68,4	79,5	93,5	125,2	124,8	163,9	180,4	194,8	

2) at max. bore d

GKN STROMAG PERIFLEX®VN...GB/ON SERIES >

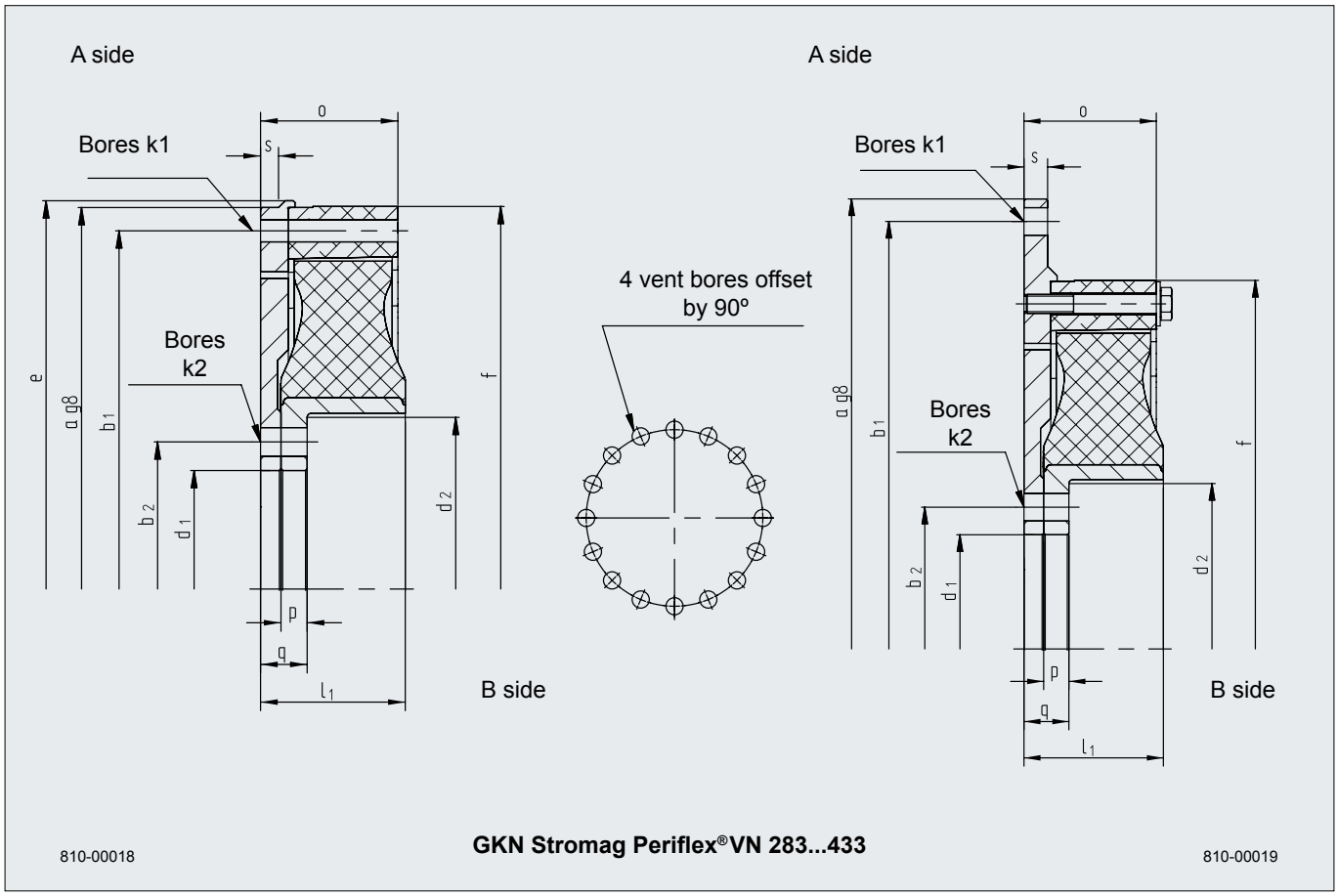

Size		Periflex® VN 283		Periflex® VN 350		Periflex® VN 358		Periflex® VN 430		Periflex® VN 433	
Tyre		VN 28311 VN 28331 VN 28321 VN 28341 VN 28351		VN 35011 VN 35031 VN 35021 VN 35041 VN 35051		VN 35811 VN 35831 VN 35821 VN 35841 VN 35851		VN 43011 VN 43031 VN 43021 VN 43041 VN 43051		VN 43311 VN 43331 VN 43321 VN 43341 VN 43351	
SAE connection		10“	11½“	11½“	14“	11½“	14“	14“	18“	14“	18“
Diameter mm	a	314,4	352,4	352,4	466,7	352,4	466,7	466,7	571,5	466,7	571,5
	b_1	295,3	333,4	333,4	438,2	333,4	438,2	438,2	542,9	438,2	542,9
	b_2	117	117	140	140	150	150	125	125	180	180
	d_1	95	95	115	115	125	125	150	150	145	145
	d_2	133	133	165	165	175	175	175	175	210	210
	e	320	360	360	–	360	–	475	–	475	–
	f	316	316	355	355	355	355	468	468	468	468
Bore mm	k_1	8x11	8x11	8x11	8x13,5	8x11	8x13,5	8x13,5	6x17,5	8x13,5	6x17,5
	k_2	16x11	16x11	16x13,5	16x13,5	20x13,5	20x13,5	20x13,5	20x13,5	16x17,5	16x17,5
Lengths mm	l_1	52	52	57	57	63	63	69	69	88,5	88,5
	o	52	52	56	56	67	67	67	67	84	84
	p	10	10	12	12	12	12	12	12	16	16
	q	22	22	25	25	27	27	23	23	28,5	28,5
	s	7	7	7	12	7	12	8	13	11	15
Mass moment of inertia kg m²	J_A side	0,1140	0,1840	0,1630	0,4570	0,1820	0,4760	0,6480	1,7220	0,755	1,524
	J_B side	0,0330	0,0330	0,0740	0,0740	0,0950	0,0950	0,1730	0,1730	0,315	0,315
Mass kg		10,6	13,1	14,3	21,1	15,8	22,6	27,0	44,5	35,6	47,0

GKN STROMAG PERIFLEX® VN...GB/ON SERIES >

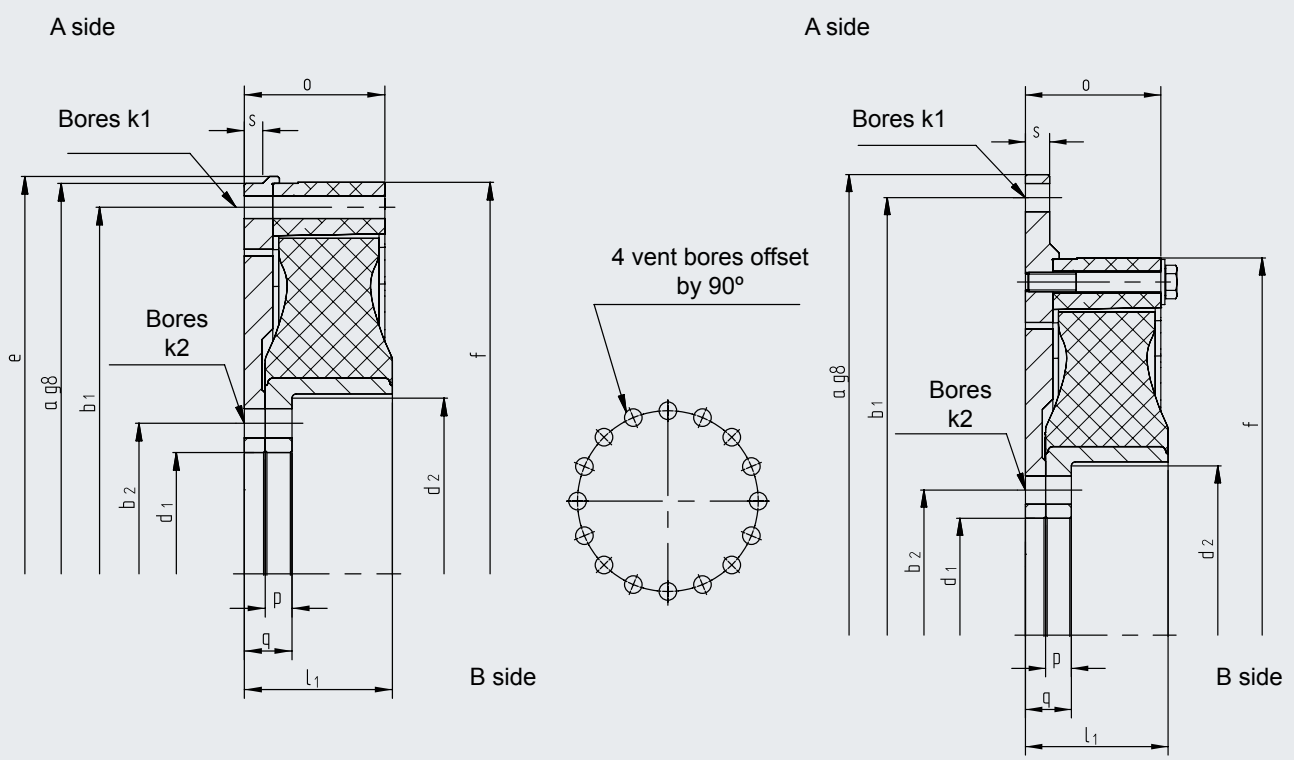

Size		Periflex® VN 436			Periflex® VN 439			Periflex® VN 544		Periflex® VN 549		Periflex® VN 666		Periflex® VN 726
Tyre		VN 43611 VN 43631 VN 43621 VN 43641 VN 43651			VN 43911 VN 43931 VN 43941 VN 43951			VN 54411 VN 54431 VN 54421 VN 54441 VN 54451		VN 54911 VN 54931 VN 54921 VN 54941 VN 54951		VN 66611 VN 66631 VN 66621 VN 66641 VN 66651		VN 72611 VN 72631 VN 72621 VN 72641 VN 72651
SAE connection		14“	16“	18“	14“	16“	18“	18“	21“	18“	21“	21“	24“	24“
Diameter mm	a	466,7	517,5	571,5	466,7	517,5	571,5	571,5	673,1	571,5	673,1	673,1	733,4	733,4
	b_1	438,2	489	542,9	438,2	489	542,9	542,9	641,4	542,9	641,4	641,4	692,2	692,2
	b_2	190	190	190	220	220	220	270	270	270	270	320	320	
	d_1	155	155	155	185	185	185	230	230	230	230	275	275	other
	d_2	220	220	220	250	250	250	296	296	300	300	364	364	dimensions
	e	475	526	–	475	526	–	580	683	683	683	692	744	on request
	f	468	468	468	464	455	464	572	572	572	572	692	692	
Bore mm	k_1	8x13,5	8x13,5	6x17,5	8x13,5	8x13,5	6x17,5	12x17,5	12x17,5	12x17,5	12x17,5	12x17,5	12x20	24x20
	k_2	20x17,5	20x17,5	20x17,5	12x22	12x22	12x22	24x17,5	24x17,5	24x22	24x22	24x22	24x22	30x21*
Lengths mm	l_1	106	106	106	85	85	85	122,5	122,5	110	110	159,5	159,5	
	o	100	100	100	85	90	85	125	160	125	160	164	164	
	p	16	16	16	18	18	18	22	22	22,5	22,5	30	30	
	q	32	32	32	40	40	40	44,5	44,5	45	45	63	63	
	s	15	15	15	15	15	15	14	14	14	14	12	12	other
Mass moment of inertia kg m²	J_A side	0,965	1,596	2,419	0,851	1,565	2,414	2,231	4,705	2,237	4,711	5,845	7,676	dimensions
	J_B side	0,378	0,378	0,378	0,326	0,326	0,326	0,956	0,956	1,137	1,137	2,584	2,584	on request
Mass kg		45,0	58,4	68,8	33,6	44,8	43,6	67,1	93,4	71,0	97,3	125,2	139,6	

*) contains 2 vent bores

GKN STROMAG PERIFLEX® VN...W SERIES >

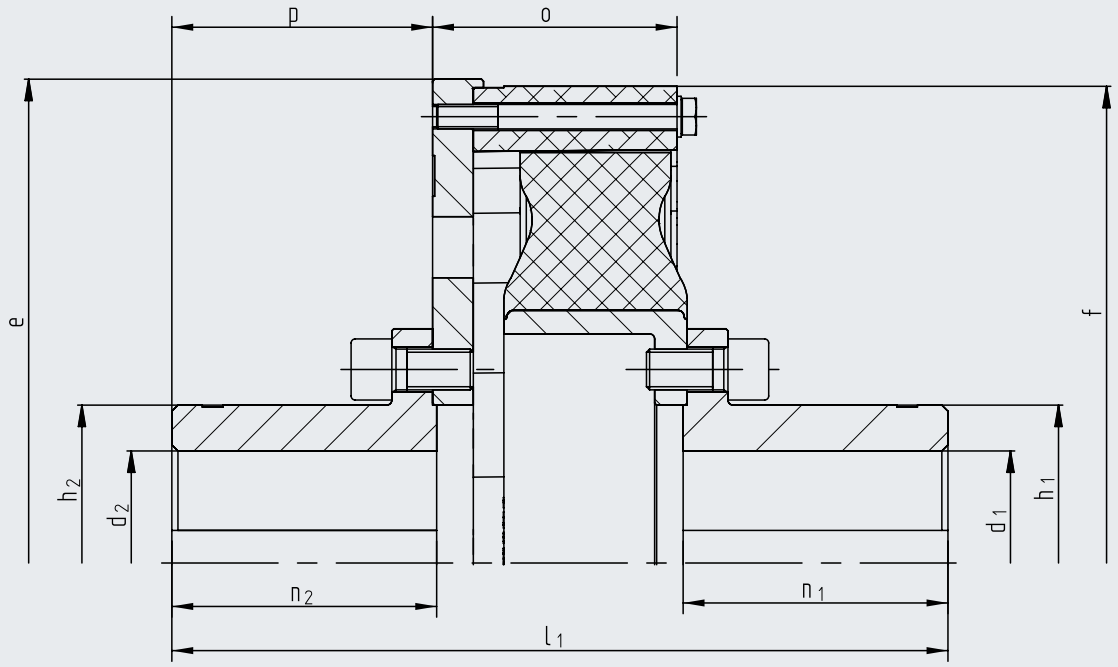

GKN Stromag Periflex® VN 183...358

810-00012

Size		Periflex® VN 183	Periflex® VN 230	Periflex® VN 280	Periflex® VN 283	Periflex® VN 350	Periflex® VN 358
Tyre		VN 18311 VN 18331 VN 18321 VN 18341 VN 18351	VN 23011 VN 23031 VN 23021 VN 23041 VN 23051	VN 28011 VN 28031 VN 28021 VN 28041 VN 28051	VN 28311 VN 28331 VN 28321 VN 28341 VN 28351	VN 35011 VN 35031 VN 35021 VN 35041 VN 35051	VN 35811 VN 35831 VN 35821 VN 35841 VN 35851
Diameter mm	d_{1max}	43	50	55	65	80	85
	d_{2max}	43	50	55	65	80	85
	e	222	271	322	322	360	360
	f	218	266	316	316	355	355
	h_1	61	70	75	90	112	120
	h_2	61	70	75	90	112	120
Lengths mm	l [1)]	174	186	203	280	279	289
	n_1	60	65	70	105	105	105
	n_2	60	65	70	105	105	105
	o	53	58,5	65	75	71	71
	p	58	63	68	103	103	103
Mass moment of inertia kg m²	J_A side[2)]	0,0282	0,0716	0,1468	0,1920	0,3190	0,3290
	J_B side[2)]	0,0038	0,0080	0,0177	0,0275	0,0530	0,0870
Mass kg[2)]		6,6	9,4	15,2	22,1	30,1	33,8

1) Dim. l can be modified by moving the connection ring within specified tolerances
2) at max. bore d_1 and d_2

GKN STROMAG PERIFLEX® VN...W SERIES >

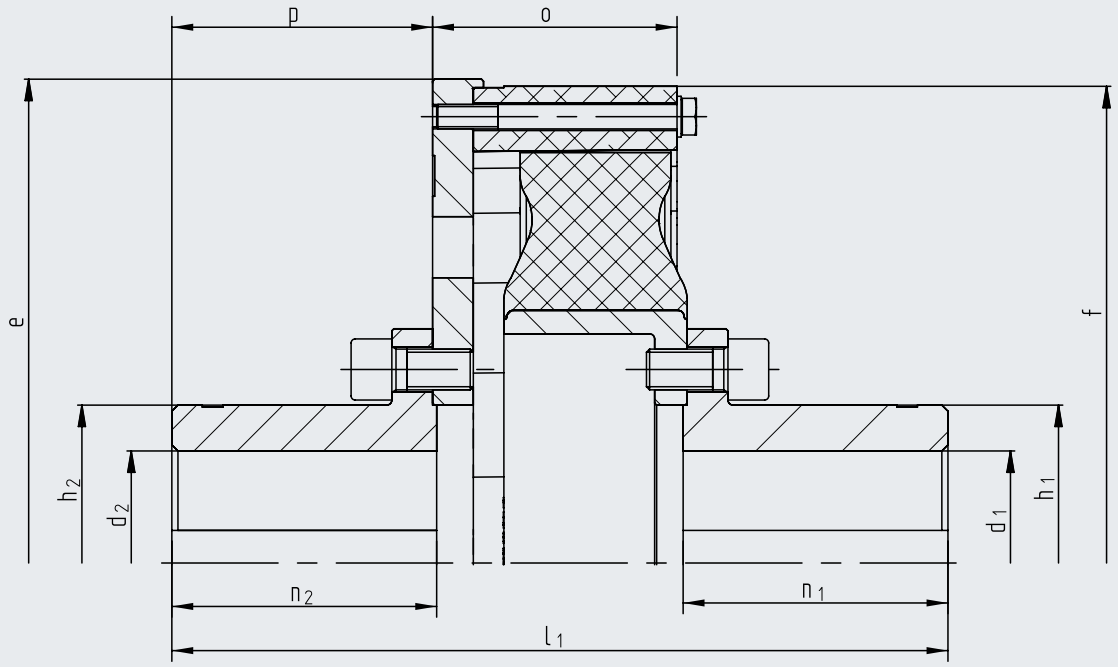

810-00012

Size		Periflex® VN 430	Periflex® VN 433	Periflex® VN 436	Periflex® VN 439	Periflex® VN 544	Periflex® VN 549	Periflex® VN 666	Periflex® VN 726
Tyre		VN 43011 VN 43031 VN 43021 VN 43041 VN 43051	VN 43311 VN 43331 VN 43321 VN 43341 VN 43351	VN 43611 VN 43631 VN 43621 VN 43641 VN 43651	VN 43911 VN 43931 VN 43941 VN 43951	VN 54411 VN 54431 VN 54421 VN 54441 VN 54451	VN 54911 VN 54931 VN 54921 VN 54941 VN 54951	VN 66611 VN 66631 VN 66621 VN 66641 VN 66651	VN 72611 VN 72631 VN 72621 VN 72641 VN 72651
Diameter mm	d_{1max}	85	100	110	130	160	150	190	other dimensions on request
	d_{2max}	85	100	110	130	160	150	190	
	e	475	475	475	475	584	584	683	
	f	468	468	468	468	572	572	692	
	h_1	120	145	155	182	225	220	270	
	h_2	120	145	155	182	225	220	270	
Lengths mm	l [1]	297	352	381	352	548	533	536	
	n_1	105	125	130	130	210	210	190	
	n_2	105	125	130	130	210	210	190	
	o	86	100	120	125	140	125	169	
	p	103	123	128	125	206	206	183,5	
Mass moment of inertia kg m²	J_A-side[2]	1,015	1,271	1,350	1,385	3,648	3,486	8,985	
	J_B-side[2]	0,123	0,241	0,318	0,352	1,024	1,200	2,623	
Mass kg[2]		47,8	69,3	75,7	81,6	158,0	162,6	254,8	

1) Dim. l can be modified by moving the connection ring within specified tolerances
2) at max. bore d_1 and d_2

GKN STROMAG PERIFLEX® VP...G SERIES >

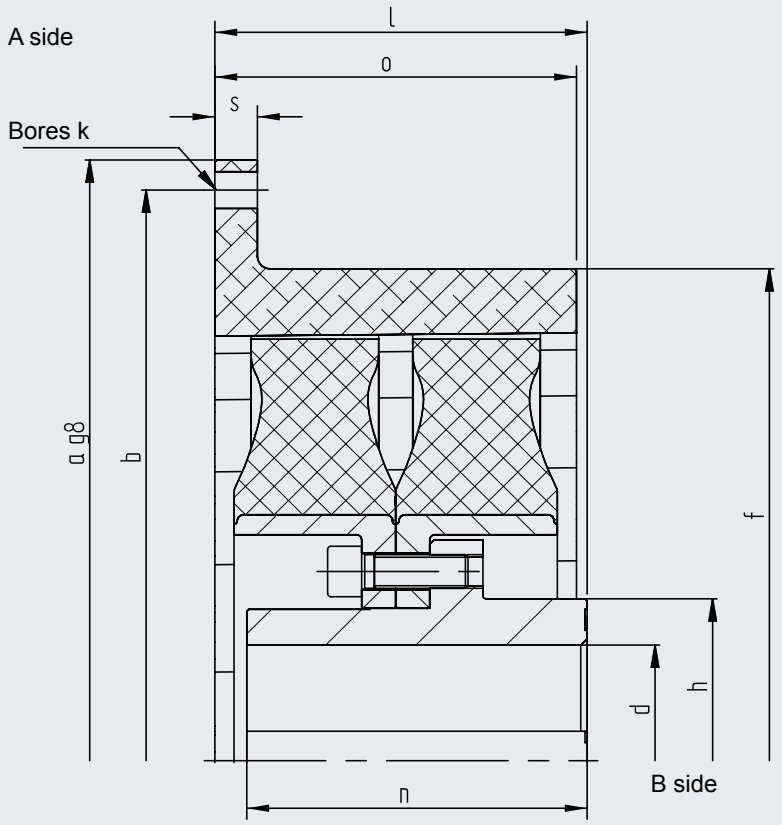

GKN Stromag Periflex®VP 433...726

810-00013

Size		Periflex® VP 433	Periflex® VP 436	Periflex® VP 439	Periflex® VP 544	Periflex® VP 549	Periflex® VP 666	Periflex® VP 726
Tyre		VN 43311 VN 43331 VN 43321 VN 43341 VN 43351	VN 43611 VN 43631 VN 43621 VN 43641 VN 43651	VN 43911 VN 43931 VN 43941 VN 43951	VN 54411 VN 54431 VN 54421 VN 54441 VN 54451	VN 54911 VN 54931 VN 54921 VN 54941 VN 54951	VN 66611 VN 66631 VN 66621 VN 66641 VN 66651	VN 72611 VN 72631 VN 72621 VN 72641 VN 72651
SAE connection		18“	18“	18“	21“	21“	24“	–
Diameter mm	a	571,5	571,5	571,5	673,1	673,1	733,4	995
	b	542,9	542,9	542,9	641,4	641,4	692,2	950
	d_{max}	100	110	130	160	180	190	250
	f	468	468	455	572	572	692	803
	h	154	168	185	225	300	270	350
Bore k mm		12x17,5	12x17,5	12x17,5	12x17,5	12x17,5	12x20,0	32x21,0
Lengths mm	l 1)	175	180	180	244	285	286	370
	n	160	160	160	220	200	250	350
	o	170	170	180	220	220	276	324
	s	20	20	25	25	25	31	32
Mass moment of inertia kg m²	J_A-side	1,186	1,228	1,205	3,120	3,132	7,702	15,85
	J_B-side 2)	0,439	0,582	0,568	1,587	2,384	4,545	8,730
Mass kg 2)		61,7	70,0	67,3	125,0	151,0	229,6	367,4

1) Dim. l can be modified by moving the connection ring within specified tolerances
2) at max. bore d_1 and d_2

GKN STROMAG PERIFLEX®VP...R SERIES >

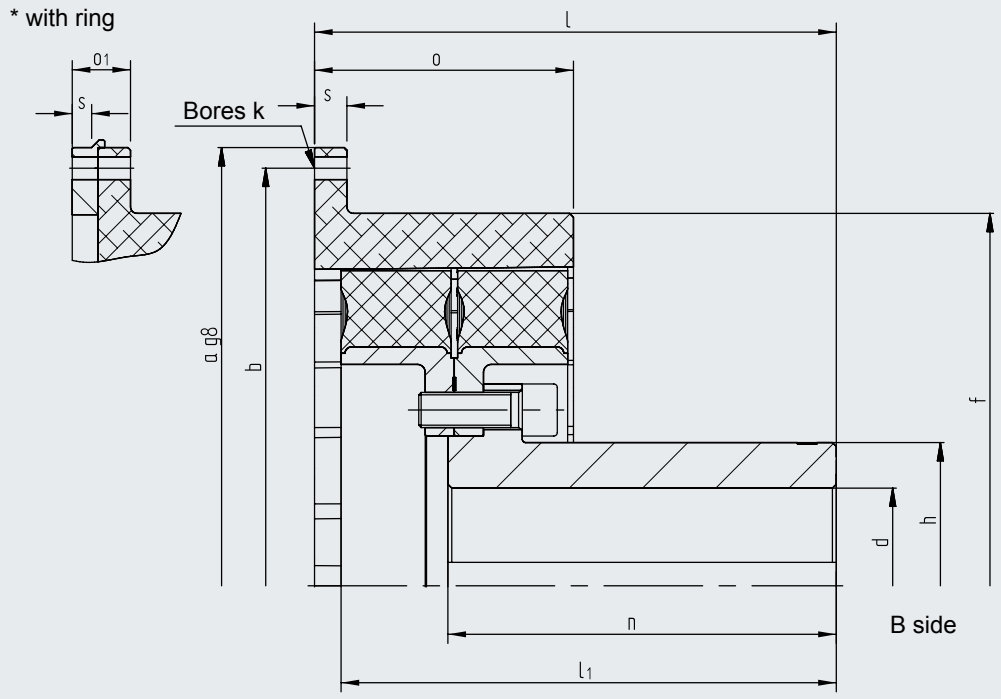

GKN Stromag Periflex®VP 433...726

810-00014

Size		Periflex® VP 433	Periflex® VP 436	Periflex® VP 439	Periflex® VP 544	Periflex® VP 549	Periflex® VP 666	Periflex® VP 726
Tyre		VN 43311 VN 43331 VN 43321 VN 43341 VN 43351	VN 43611 VN 43631 VN 43621 VN 43641 VN 43651	VN 43911 VN 43931 VN 43941 VN 43951	VN 54411 VN 54431 VN 54421 VN 54441 VN 54451	VN 54911 VN 54931 VN 54921 VN 54941 VN 54951	VN 66611 VN 66631 VN 66621 VN 66641 VN 66651	VN 72611 VN 72631 VN 72621 VN 72641 VN 72651
SAE connection		18“	18“	18“	21“	21“	24“	–
Diameter mm	a	571,5	571,5	571,5	673,1	673,1	733,4	995
	b	542,9	542,9	542,9	641,4	641,4	692,2	950
	d_{max}	100	110	130	160	150	190	250
	f	468	468	455	572	572	692	803
	h	145	155	182	225	220	270	350
Bore k mm		12x17,5	12x17,5	12x17,5	12x17,5	12x17,5	12x20,0	32x21
Lengths mm	l 1)	344	350	328	336	403	390	514
	l_1	321	335	308	312	382,5	370	–
	n	250	250	250	220	300	250	350
	o	170	190	180	220	220	276	324
	o_1	–	40	–	–	–	–	–
	s	20	15	25	25	25	31	32
Mass moment of inertia kg m²	J_A-side	1,186	2,208	1,205	3,268	2,952	7,748	15,850
	J_B-side2)	0,453	0,817	0,651	1,577	2,119	4,519	9,070
Mass kg2)		66,3	86,4	79,7	126,4	149,0	228,2	379,3

1) Dim. l can be modified by moving the connection ring within specified tolerances
2) at max. bore d

GKN STROMAG PERIFLEX®VP...GB SERIES >

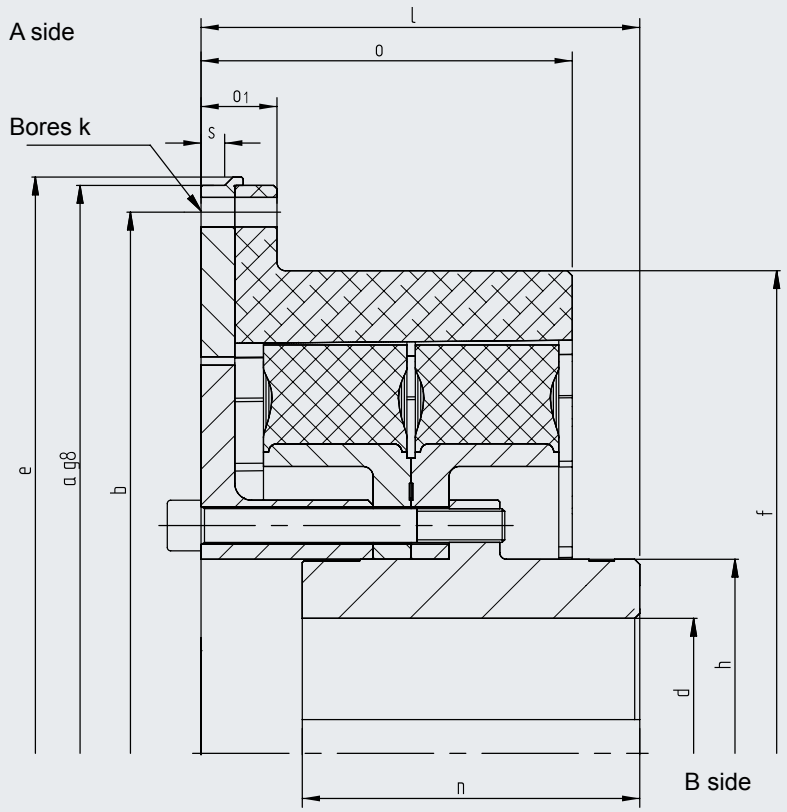

GKN Stromag Periflex®VP 433...726

810-00020

Size		Periflex® VP 433	Periflex® VP 436	Periflex® VP 439	Periflex® VP 544	Periflex® VP 549	Periflex® VP 666	Periflex® VP 726
Tyre		VN 43311 VN 43331 VN 43321 VN 43341 VN 43351	VN 43611 VN 43631 VN 43621 VN 43641 VN 43651	VN 43911 VN 43931 – VN 43941 VN 43951	VN 54411 VN 54431 VN 54421 VN 54441 VN 54451	VN 54911 VN 54931 VN 54921 VN 54941 VN 54951	VN 66611 VN 66631 VN 66621 VN 66641 VN 66651	VN 72611 VN 72631 VN 72621 VN 72641 VN 72651
SAE connection		18“	18“	18“	21“	21“	24“	–
Diameter mm	a	571,5	571,5	571,5	673,1	673,1	733,4	995 950 other dimensions on request
	b	542,9	542,9	542,9	641,4	641,4	692,2	
	d_{max}	100	110	130	160	160	190	
	e	–	–	–	683	683	744	
	f	468	468	464	572	572	692	
	h	154	168	185	225	225	270	
Bore k mm		12x17,5	12x17,5	12x17,5	12x17,5	12x17,5	12x20,0	32x21
Lengths mm	l	192	212	197	264	260	308	other dimensions on request
	n	160	160	160	220	200	250	
	o	187	202	197	240	240	298	
	o_1	–	–	–	45	45	53	
	s	15	15	15	14	14	12	
Mass moment of inertia kg m²	J_A-side	3,433	3,514	3,152	5,670	5,682	11,283	
	J_B-side[2)]	0,679	0,819	1,009	2,372	2,709	6,340	
Mass kg[2)]		122,4	133,4	119,0	192,4	197,3	323,9	

2) at max. bore d

GKN STROMAG PERIFLEX®VP...W SERIES >

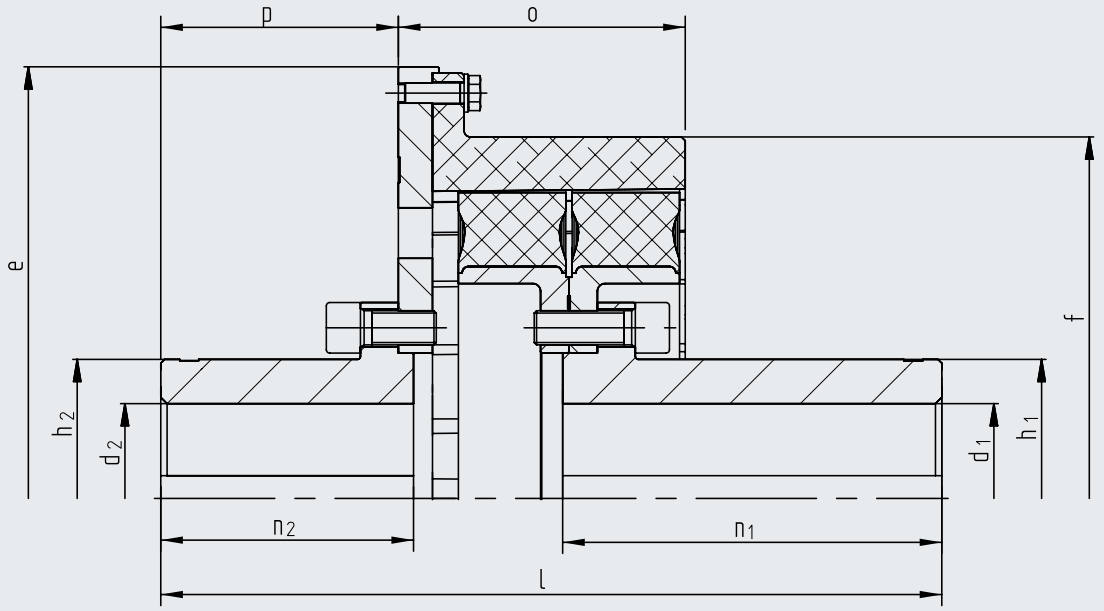

A side B side

GKN Stromag Periflex®VP 433...726

810-00015

Size		Periflex® VP 433	Periflex® VP 436	Periflex® VP 439	Periflex® VP 544	Periflex® VP 549	Periflex® VP 666	Periflex® VP 726
Tyre		VN 43311 VN 43331 VN 43321 VN 43341 VN 43351	VN 43611 VN 43631 VN 43621 VN 43641 VN 43651	VN 43911 VN 43931 VN 43941 VN 43951	VN 54411 VN 54431 VN 54421 VN 54441 VN 54451	VN 54911 VN 54931 VN 54921 VN 54941 VN 54951	VN 66611 VN 66631 VN 66621 VN 66641 VN 66651	VN 72611 VN 72631 VN 72621 VN 72641 VN 72651
Diameter mm	d_{1max} d_{2max} e f h_1 h_2	100 100 475 468 145 145	110 110 526 468 155 155	130 130 526 455 182 182	160 160 683 572 225 225	150 150 683 572 220 220	190 190 744 692 270 270	weitere Maße auf Anfrage
Lengths mm	l [1)] n_1 n_2 o p	519 250 160 190 155	524 250 160 209 155	503 250 160 175 155	569 220 210 247 206	618 300 200 227 188	659 250 250 303 242	
Mass moment of inertia kg m²	J_A-side J_B-side[2)]	1,744 0,612	2,819 0,603	2,171 0,651	8,101 1,577	7,916 2,078	15,177 4,519	
Mass kg[2)]		102,6	128,0	98,0	234,4	255,8	378,3	

1) Dim. l can be modified by moving the connection ring within specified tolerances
2) at max. bore d1 and d2

GKN STROMAG PERIFLEX®VN COUPLING CHARACTERISTICS >

T_{KN}	
The coupling's nominal torque can be permanently transferred over the whole permitted speed range. It must be higher than the system's nominal torque T_N.	$T_{KN} \geq T_N$
An application factor of 1.2 is recommended for the simple design of a drive system based exclusively on the nominal torque.	$T_{KN} \geq T_N \cdot 1{,}2$

T_{Kmax}	
The coupling´s max torque T_{Kmax} can be endured as a peak load and may not be exceeded by peak torques T_{max1} when the system is operating in normal, nonstationary mode. A system's normal nonstationary modes are unavoidable and occur repeatedly (e.g. starting/stopping, resonance passes, switchovers, accelerations, etc.).	$T_{Kmax} \geq T_{max1}$
Overloading the GKN Stromag Periflex®VN coupling with peak torques T_{max2} in a system's anomalous nonstationary mode shortens the service life and is tolerated in individual cases. A system's anomalous nonstationary modes are avoidable and are not part of the planned operating scheme (e.g. emergency stops, sync failure, short circuits, etc.).	$T_{Kmax} \cdot 1{,}5 \geq T_{max2}$

T_{Kw}
The admissible permanent alternating torque describes the amplitude of the max permanent periodic torque fluctuation. This torque may be superimposed on a base load equal to T_{KN}. This requires in addition an analysis of the max damping power P_{KV}.

ΔK_a	
Max axial displacement of the coupling. The shafts' axial displacement ΔW_a must be less than ΔK_a. The axial displacement for GKN Stromag Periflex®VN couplings depends on the installed connection ring. The disc tyre must always lie over its full width in the connection ring.	$\Delta K_a \geq \Delta W_a$

ΔK_r	
Max radial displacement of the coupling. The shafts' radial displacement ΔW_r must be less than ΔK_r.	$\Delta K_r \geq \Delta W_r$

ΔK_w	
Max angular displacement of the coupling. The shafts' angular displacement ΔW_w must be less than ΔK_w. A ΔK_w value of 0.5° is permitted for Periflex®VN couplings. This value, however, may be utilised to the full only when there are no other options for shaft displacement.	$\Delta K_w \geq \Delta W_w$

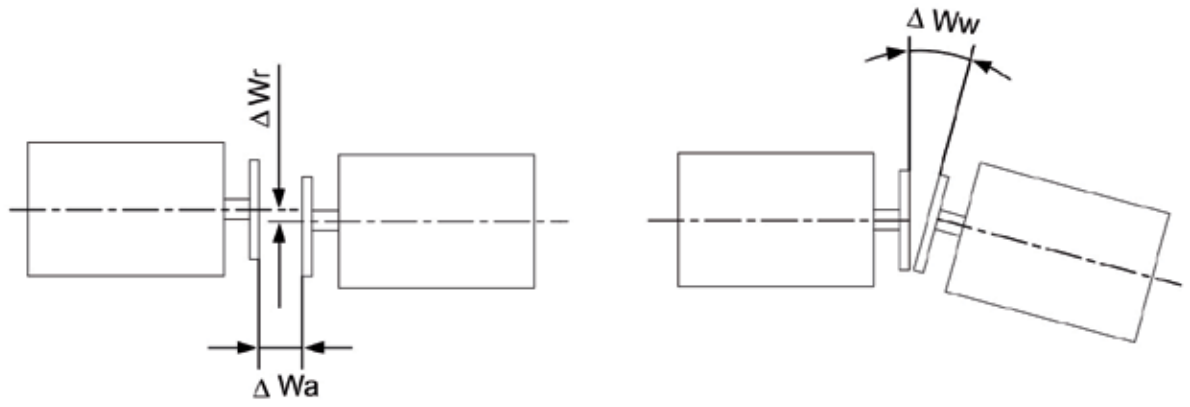

GKN STROMAG PERIFLEX®VN COUPLING CHARACTERISTICS >

C_a	
The axial spring stiffness represents the ratio of axial reaction force to axial displacement. GKN Stromag Periflex®VN couplings do not generate axial forces when the disc tyre lies over its full width in the connection ring.	$C_a = 0$

C_r
The radial stiffness represents the ratio of radial reaction force to radial displacement. The specified values apply to the coupling at operating temperature, with a surface temperature of about 50 °C.

C_{Tdyn}	
The dynamic torsional spring stiffness represents the ratio of torque amplitude to torque angle during an oscillation. The torque amplitude is superimposed on an initial load (coupling torque). The GKN Stromag Periflex®VN coupling's C_{Tdyn} value remains constant over the coupling torque (linear characteristic curve), but changes with the amplitude, frequency, and temperature of the flexible element. The specified nominal values for C_{Tdyn} are based on a coupling torque of 0.8 • T_{KN}, an alternating torque of 0.2 • T_{KN}, and a frequency of 10 Hz on a coupling at operating temperature, with a surface temperature of about 30 °C.	$C_{Tdyn} = \frac{T_{el}}{\varphi_w}$
$C_{Tdyn\ warm}$ takes into account that high power dissipation causes the coupling to heat up.	$C_{Tdyn\ warm} = 0{,}7 \cdot C_{Tdyn}$
$C_{Tdyn\ A}$ takes into account the effects of a small alternating torque amplitude.	$C_{Tdyn\ A} = 1{,}35 \cdot C_{Tdyn}$
Calculations of torsional vibrations in the system are recommended to include **$C_{Tdyn\ (warm)}$** (0.7) and **$C_{Tdyn\ A}$** (1.35).	

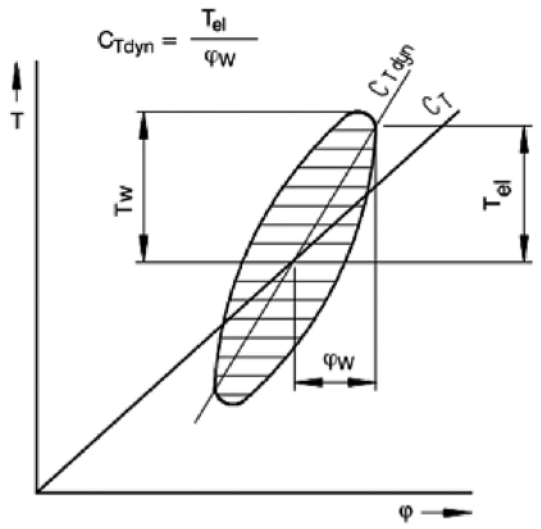

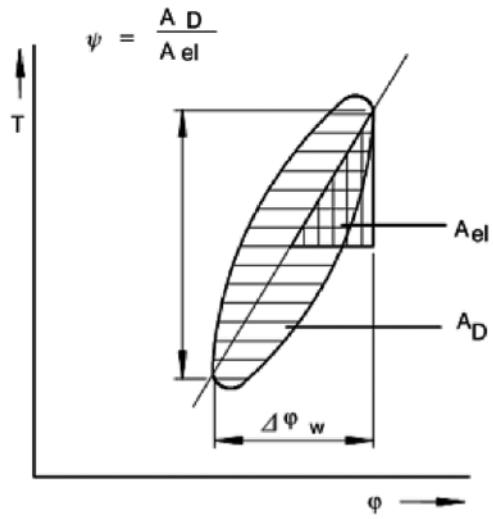

COUPLING DESIGN, QUESTION SHEET >

Engine-Side		
Engine type		
Engine power	P [kW]	
Engine speed	n [rpm]	
Inline/V engine	R/V (angle)	
Number of cylinders	z	
Moments of inertia (engine + flywheel)	J [kg m²]	

Driven-Side		
Kind of application (alternator, pump, compressor, etc.)		
Type		
Moments of inertia	J [kgm²]	
Shaft diameter	d [mm]	
Shaft lenght	l [mm]	

GKN Stromag Periflex®VN coupling

Installation space: enter required measurements in the diagram below

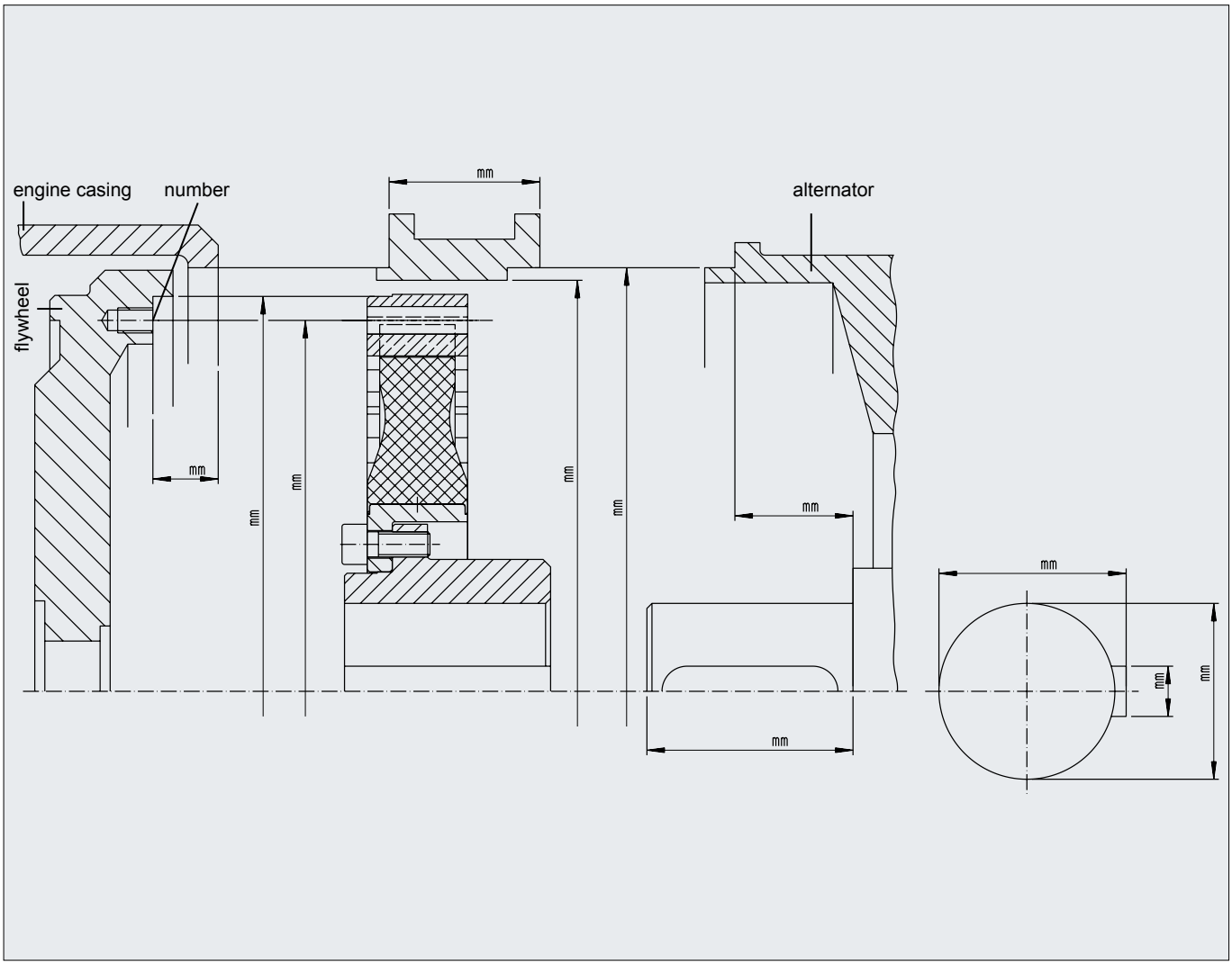

USE IN POTENTIALLY EXPLOSIVE ENVIRONMENTS, QUESTION SHEET >

Applications		○	Group II (above ground)
Potentially explosive atmosphere of air and		○	gas
		○	dust
Zone (Category)	gas	○	Zone 1 (Category 2G)
		○	Zone 2 (Category 3G)
	dust	○	Zone 22 not electrically conducting (Category 3D)
Temperature category in atmosphere with gas	gas	○	T1
		○	T2
		○	T3
		○	T4
Max surface temperature	dust	○	125 °C
		○	< 120 °C
		○	-20 °C to +40 °C
Ambient temperature		○	other ambient temperatures only with certain restrictions

GKN LAND SYSTEMS

GKN Land Systems© 2014
PO Box 55,
Ipsley House,
Ipsley Church Lane,
Redditch,
Worcestershire B98 0TL
P: +44 (0)1527 517 715

INTEGRATED POWERTRAIN COMPONENTS, SYSTEMS AND SOLUTIONS

FROM POWER SOURCE

TO POWER APPLIED

Stromag
safety in motion

GKN Stromag AG
Hansastraße 120
59425 Unna
P: +49 2303 102-0
F: +49 2303 102-355

The GKN Stromag AG
is a company of GKN Land Systems

Find out more about GKN Stromag
global trade representatives

GKN LS 21 GB 0714 FL 1-0,25

WA HEAD OFFICE
Unit 1 / 45 Inspiration Drive WA 6065
(08) 9303 4966 (08) 9303 4977
info@chainanddrives.com.au

NSW HEAD OFFICE
Unit 7 / 70 Holbeche Road Arndell Park NSW 2148
(02) 9674 8611 (02) 9674 8363
salesnsw@chainanddrives.com.au

www.chainanddrives.com.au