CHAIN & DRIVES®
COMPLETE POWER TRANSMISSION

POWER > SPEED > TORQUE

TECO
MAX - E2

TOTALLY ENCLOSED FAN-COOLED CAST IRON FRAME SERIES

Low Voltage 3-Phase Induction Motors | Range **0.18kW to 185kW**

Contents

PRODUCT DETAILS	page
General Information	2
Electrical Design and Standards	
Altitude	2
Ambient	2
Direction of Rotation	2
Duty Rating	2
Electric Supply	2
Motor Types / MEPS	2-3
Performance	3
Standards	3
Stator and Windings	3
Testing	3
Variable Speed Drive Suitability	3
Winding Protection	3
Mechanical Design and Standards	
Balance	4
Bearing and Lubrication System	4
Bearing Lubrication Instructions	5
Bearing False Brinelling Protection	5
Cooling System	6
Finish	6
Hardware	6
MAX-E3 – H66	6
Mounting	6
Motor Construction	6
Protection	6
Rating Plate	6
Rotor Assembly	7
Terminal Box	7
Maximum Cable Sizes	7
Options	7
Performance Data – MAX-E2 Range 63 ~ 315M	8 ~ 9
Outline Dimensions – Frame 63 ~ 132 Foot Mount	10
Outline Dimensions – Frame 160 ~ 250 Foot Mount	11
Outline Dimensions – Frame 280 ~ 315M Foot Mount	12
Outline Dimensions – Frame 63 ~ 132 Flange Mount	13
Outline Dimensions – Frame 160 ~ 250 Flange Mount	14
Outline Dimensions – Frame 63 ~ 200 Foot and Flange Mount	15
Outline Dimensions – Frame 225 ~ 315M Foot and Flange Mount	16
Outline Dimensions – Frame 63 ~ 132 Foot and C Face Mount	17

TECHNICAL DETAILS	page
Mechanical Design	
Axial / Radial loadings	18
Cooling	19
Force Cooling IC416	20
Mounting (IM code)	21
Mounting - Cast Iron Slide Rails (dimensions)	21
Protection (IP code)	22
Electrical Design	
Altitude and Ambient Temperature	23
Anti-condensation Heaters (optional)	24
Connection Diagrams	24
Duty	24
Formulae and Conversion	25
Insulation Classes	26
Speed vs. Torque – Current	26
Starts per Hour	27
Maximum Load Inertia	27
Thermal Protection	28
Thermistors	28
Resistance Temperature Detectors	29
Tolerances for electromechanical characteristics	30
Variable Speed Drives (VVVF)	31 ~ 32
Voltage and Frequency during operation	33

← RETURN TO INDEX

TECO

Welcome to Teco!

TECO Australia – Electric Motor Division

Established in 1983 as a wholly owned subsidiary of TECO Electric & Machinery Co., TECO Australia has earned a reputation as a reliable supplier of superior quality Electric Motors, Variable Speed Drive systems and Motor Controls. These products are all designed, manufactured and tested to meet stringent Australian and International Standards.

TECO Electric Motors are regarded as one of the leading brands available on the market and are regularly specified and preferred amongst equipment manufacturers, constructors, engineering companies and major end-users alike.

TECO Electric & Machinery Co.

From modest beginnings in 1956, TECO Electric & Machinery Co. has grown to be one of the worlds largest manufacturers of an extensive range of electric motors. In addition to the core manufacturing facilities in Taiwan, the continual growth of TECO on a global front has seen the formation in 1995 of the TECO Westinghouse Motor Company in the USA, borne out of the 100% ownership of the Westinghouse Motor Company along with the establishment of additional major manufacturing facilities around the world to service new markets and meet global demand.

TECO Westinghouse

Today TECO designs and manufactures a complete range of low, medium and high voltage motors, Variable Speed Drives and Control Gear with sales and support being offered on a global basis.

Quality Assurance

All TECO manufacturing plants and TECO Australia have been assessed to meet the requirements of ISO9001:2008 documented quality systems.

Quality System
Quality Endorsed Company
ISO 9001
Lic. QEC1088
SAI Global

Environmental and RoHS

TECO major manufacturing plants in Taiwan have ISO14001 Environmental Management System accreditation.

Low Voltage motors manufactured by TECO do not contain (or contain within the maximum allowable limits) any restricted hazardous substances as per European Directive 2002/95/EC(RoHS).

← RETURN TO INDEX

TECO

Driving & Connecting Globally

General Information

The motors described in this catalogue are designed and manufactured by TECO Electric & Machinery Co. and are Squirrel Cage Induction Motors intended for general purpose industrial / arduous mining applications and meet all relevant sections of the Australian, New Zealand and International Standards detailed herein.

Electrical Design and Standards

Altitude

Designed for operation at an altitude up to 1000 metres above sea level, refer to page 23 for higher altitudes.

Ambient

Motors are designed to operate in ambient conditions of -20°C to +40°C with motors being capable for operation within an ambient of 50°C. Please refer to page 23 for operation in adverse ambient conditions.

Direction of Rotation

Standard rotation is clockwise when viewed from the drive end with the terminal marking corresponding to incoming line markings.

Duty Rating

All motors have a maximum continuous duty rating of S1 to AS60034-1. Other duty ratings are available on request.

Electric Supply

Stock motors are designed for operation on a 380~415 Volt 3-Phase 50 Hz supply and are also suitable for a 440~480 Volt 3-Phase 60 Hz supply.

Motors 4 kW and below are 380~415 Volt 50 Hz STAR connected and may also be reconnected to 240 Volt 3-Phase 50 Hz DELTA configuration for use with single phase input inverters.

Motors 5.5 kW and larger are 380~415 Volt 50 Hz DELTA connected.

Please refer to page 24 for Connection diagram.

Motors can be manufactured for supply systems of up to 1100 Volts, 50 or 60 Hz on a factory made to order basis or by local rewind / wind.

Motor Types / MEPS (Minimum Efficiency Performance Standard)

All motors meet or exceed the requirements of Australian New Zealand Standard "AS/NZS1359.5-2004 3-Phase cage induction motors high efficiency and minimum efficiency performance standards requirements" within the range of 0.75 kW to less than 185 kW, 2 – 4 – 6 & 8 pole single speed, rated S1 continuous duty, compliance as detailed herein.

← RETURN TO INDEX

TECO

Standards and TECO compliance is detailed below

TECO Type Designation	Frame Size	Output kW	Name plated	Efficiency Level
AEEB-NE	D63 ~ D90L	< 0.75	TECO	Not applicable
AEHB ~ AEHD	D80 ~ D315M	0.75 ~ 185	TECO MAX-E2™	MEPS table B2 or B3 as nominated

* MEPS covers motors less than 185kW.
* Larger sizes also available, refer to TECO for details.

Performance

Motors are designed to meet the performance requirements of Design N as per AS1359.41, normal torque for Direct On Line starting.

Motors are also suitable for other means of starting, depending on load characteristics, please refer to TECO.

Other performance characteristics can be manufactured to suit any special requirement.

Standards

Motors are designed, manufactured and tested in accordance with AS1359. Frame sizes comply with AS1359.30 Australian / British allocations.

Motors also meet the requirements of European Directives where applicable and are CE marked.

For EMC "C-tick" requirements to AS1044, squirrel cage induction motors fall into Compliance Level 1 "Voluntary" category.

TECO has a "Declaration of Conformity" and is a registered user of "C-tick" number N121, which covers TECO squirrel cage induction motors.

For other foreign standards i.e. UL, CSA etc., please refer to TECO.

Stator and Windings

The stator is made up of exceptional high grade, low loss insulated cold rolled electro magnetic silicon steel laminations for maximum efficiency and low core losses.

Windings are random wound with double enamelled Class H copper wire, impregnated with a solventless resin and are tropic proof rated as standard. Other insulation materials used meet Class F as a minimum.

Windings are designed with a temperature rise of less than Class B (80°C), however, in most cases are less than Class E (75°C) for long motor life, providing superior thermal reserve in abnormal conditions.

Testing

In addition to a full program of tests during manufacture each motor is subjected to routine tests to AS60034-1 prior to despatch. Performance testing (witnessed or unwitnessed) can be arranged for factory made to order motors.

Variable Speed Drive (VSD) Suitability

Motors are suitable for VSD operation, subject to torque and speed limitations depending on the load characteristics and correct installation of motor and drive.

For Variable torque loads (centrifugal pumps and fans) for speeds between 5~50 Hz derating is not normally required, outside of this range please check with TECO for motor suitability. Force cooling units are also available when necessary (please refer to page 20 for force cooling details and page 31 for VSD rating).

Electro-discharge machining of motor bearings can be a concern in some applications with larger motors on VSD's (please refer page 32 for our preventative measures).

Winding Protection

Motors D160 and larger are fitted with PTC thermistor protection (P150) within the windings (one per phase) with the leads terminated in the main terminal box.

← RETURN TO INDEX

Mechanical Design and Standards

Balance

All rotors are dynamically balanced with a half key to Class N or better, in accordance with AS1359.114.

Bearing and Lubrication System

Frame Size	Poles	DE Bearing	NDE bearing	Greasing/ Shaft Seal
D63 ~ D90L	2	Ball	Ball	Greased for life/ Gamma***
D100L ~ D160L	2	Ball	Ball	Greased for life (GR)/ Gamma***
D180M ~ D250M	2	Ball	Ball	Grease relief
D280S ~ D355*	2	Ball	Ball	Grease relief brass dust flinger
D63 ~ D90L	4 and Above	Ball	Ball	Greased for life/ Gamma***
D100L ~ D132M	4 and Above	Ball	Ball	Greased for life (GR)/ Gamma***
D160M ~ D180M/L	4 and Above	Ball (Roller)	Ball	Greased for life (GR) / Gamma***
D200L ~ D225M	4 and Above	Ball (Roller)	Ball	Grease relief/ Gamma
D250S ~ D250M	4 and Above	Roller (Ball)	Ball	Greased relief/ Gamma
D280S ~ D315M	4 and Above	Roller (Ball)	Ball	Grease relief/ brass dust flinger

Key: (options in the parentheses are alternatives)
GR – Grease Relief
* Larger sizes also available, refer to TECO for details.
** Ball bearing fitted for direct drive applications, Roller can be fitted for Belt Drive applications, please refer to TECO.
*** Oil Seal fitted to flange/Cface.

- 2 Pole motors up to D180 are suitable for direct drive or belt drive.
- 2 Pole motors D200 and larger are suitable for direct drive, belt drive above D200 please refer to TECO.
- 4 Pole and larger; up to and including D315MC, motor are suitable for Belt or Direct Drive.

TECO Through Flush Grease Relief Bearing System with Gamma Seal to D250

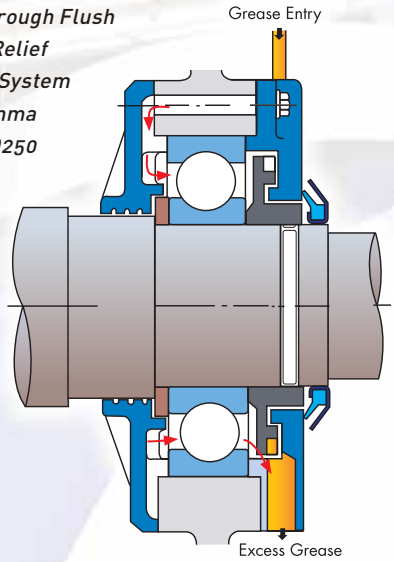

TECO Through Flush Grease Relief Bearing System with Brass Dust Flinger D280-315

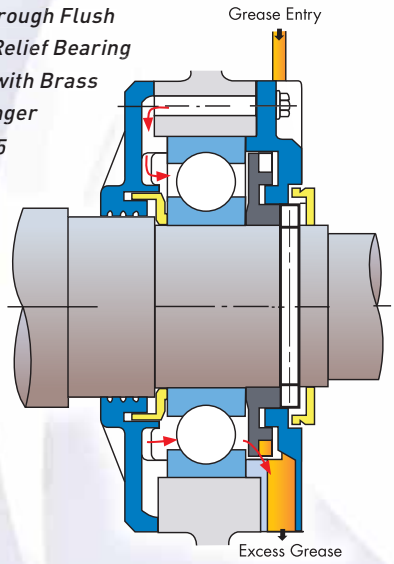

The fitment of rotating inner & outer labyrinth seals achieves effective sealing from ingress of contamination.

This is a true pressure grease relief system where the grease enters the back of the bearing then is forced through to the front and is expelled through a large external discharge chute.

This system will not allow over greasing to affect the performance of the bearings. This type of grease replenishment system will not allow contaminants to be pushed back into the bearing itself, which can cause premature bearing failure.

← RETURN TO INDEX

TECO

Bearing Lubrication Instructions

Table 1: Bearing Grease Schedule - 50Hz Operation

Bearing Number		8 Pole	6 Pole	4 Pole	2 Pole
62XX	6210	3000Hrs	3000Hrs	3000Hrs	2000Hrs
63XX	12				
72XX	13				1000Hrs
73XX	14				
	15			2000Hrs	720Hrs
	16				
	17				
	18				
	20				
	22			1500Hrs	
	24				
	26		2000Hrs	1000Hrs	

Bearing Number		8 Pole	6 Pole	4 Pole
NU2XX	NU214	3000Hrs	3000Hrs	2000Hrs
NU3XX	15			
	16			
	17			1500Hrs
	18			
	20			1000Hrs
	22			
	24			
	26		2000Hrs	500Hrs

Table 2: Bearing Grease Fill

Bearing Number		Amount (grams)
62XX	6210	30
72XX	12	40
NU2XX	13	50
	14	50
	15	60
	16	60
	17	80
	18	80
	20	100
	22	120
	24	120

Bearing Number		Amount (grams)
63XX	6310	40
73XX	12	60
NU3XX	13	80
	14	80
	15	100
	16	100
	17	120
	18	120
	20	160
	22	220
	24	270
	26	300

Notes:

1. Please ensure bearings are fully purged during commissioning, thereafter adhere to the above greasing schedule.
2. Replenishment of grease recommended when motor is running.
3. Do not mix dissimilar greases.
4. TECO recommends use of SHELL GADUS S2 V100 Lithium based grease on motors frame size up to and including D315M.

When do motors require greasing?

At initial start during commissioning.

If the motor has been out of service for three (3) months or longer.

At predetermined intervals, please refer to "Table 1".

What to do prior to greasing?

Check the motor nameplate for the type of grease and check that the grease you plan to use is fully compatible.

Clean the grease nipples on the motor and the grease gun discharge connection.

Ensure that the grease discharge chute on the motor is clean and not blocked with old hard grease.

How to effectively grease an electric motor?

The electric motor must be running with preferably the bearings up to normal operating temperature.

Pump-in ½ of the required quantity of grease as in "Table 2" to each bearing and allow to settle.

After 5-10 minutes pump-in the other ½ of the required grease quantity.

Please note it is normal to see an increase in the bearing temperature during the greasing procedure.

Expelled grease should be evident at the rotating labyrinth seal and within the discharge chute.

30 minutes after the greasing procedure the bearing temperatures should return to normal, if not, please check that there are no other reasons for an increase in bearing temperature, i.e. misalignment, high vibration etc.

Bearing False Brinelling Protection

A bearing, will experience false brinelling when it is not turning and subjected to vibrations of some sort. This is generally in cylindrical roller type bought about from transportation without an effective shaft lock to prevent movement or from vibration of the motor when de-energized. Because the bearing is not turning, the grease or oil will be gradually removed from the ball or roller contacts ending in metal to metal contact. Wear is then allowed to take place and the damage will cause the bearing to fail prematurely after start up. TECO do fit a shaft locks on D180 2 pole ~ D200 4 pole and larger to prevent false brinelling.

Extensive shaft locking clamp on D280-315M TECO motor

← RETURN TO INDEX

Cooling System

Cooling is Totally Enclosed Fan Cooled (TEFC), with integrally cast cooling fins on frame and endshields, fitted with external fan (IC411) to AS1359.106

The cooling fans are bi-directional and low noise as standard.

Finish

All external components are shot blast to a near white finish. A durable coat of Alkyd Resin primer giving excellent corrosion protection follows this preparation. The complete motor is then finish coated with Alkyd Resin Gloss Enamel in TECO Grey (Munsell 7.5BG 4/2).

Other paint systems and colours are available upon request, including chemical duty two pack epoxy paint systems.

Hardware

All hardware is electro zinc plated for better corrosion resistance.

Stainless steel hardware can be offered as an alternative, please contact TECO for the surcharge to provide this feature.

MAX-E3-H66

Please refer to separate catalogue for details on TECO High Efficiency MAX-E3-H66 motors.

Mounting

Motors are available in the following mountings, refer to page 21 for IM codes of mountings.

- Foot mounted
- Foot and Flange mounted
- Flange mounted
- Foot and C Face mounted
- C Face mounted

Motor Construction

Motor frames are high grade Cast Iron with integrally cast feet and cast iron end shields, suiting mining applications.

Castings are machined to close tolerances in order to ensure accurate alignment with minimum vibration.

Standard Materials of Construction

Frame Size	External Fan	Fan Cover	Terminal Box
D63~D160	CPP (CI)	HDPS (CI)	CI
D180 (2 pole)	CPP (CI)	HDPS (CI)	CI
D180 (4 pole)	CI	HDPS (CI)	CI
D200~D315M	CI	HDPS (CI)	CI
D80~D132	CPP (CI)	HDPS (CI)	CI
D160~D315M	CI	HDPS (CI)	CI

Key: (material in parentheses is alternative)
CPP – Conductive Polypropylene (Non Sparking)
CI - Cast Iron
HDPS - Heavy Duty Pressed Steel
* Larger sizes are also available, please refer to TECO for details.

Protection (IP rating – stock motors)

All motors are rated IP66, thereby providing excellent protection against the ingress of dust and water.

Rating Plate

A stainless steel rating plate containing all details as specified in AS60034-1 including bearing sizes are fitted to all motors. Rating plate also confirms compliance with MEPS Efficiency Standard.

As fited to motors 0.75kw and larger.

← RETURN TO INDEX

TECO

Rotor Assembly

As per the stator, the rotor core is made up of exceptional high grade, low loss insulated cold rolled electro magnetic steel laminations for maximum efficiency and low core losses.

The rotor cage is pressure die cast high conductivity aluminium with wafter blades and balance supports integrally cast onto the rotor endrings.

On some larger frame size motors, the rotor is of copper/copper alloy rotor bar construction. This rotor construction offers superior performance and reliability. TECO utilizes high frequency induction brazing as a means to enhance the structural integrity of the rotor bar to endring joint. Induction brazing provides an "all at once" uniform braze that reduces stresses and hot spots in the joint, which can cause premature fatigue and rotor bar failure.

The rotor is a press fit onto the high tensile steel shaft (ANSI1040) and is also keyed onto the shaft on motor frames D200 and larger.

Induction Brazing

Finished Rotor and Shaft Assemblies

Terminal Box

On foot and foot / flange mounted motors up to and including D315M, the terminal box is mounted on the right hand side viewed from drive end and can be transferred to the left hand side upon request.

All terminal boxes have one-piece neoprene gaskets between frame, box and gland plate and can be rotated through 360° in 90° increments. An internal earth is provided within the motor terminal box.

Maximum Cable Sizes

Frame Size	Maximium Cable Size
D63 ~ D71	2.5 mm ²
D80 ~ D112	10 mm ²
D132 ~ D180	50 mm ²
D200 ~ D225	95 mm ²
D250 ~ D315M*	185 mm ²

Notes: Sizes based on -
3 core + Earth Copper PVC Insulated / PVC Sheathed or
3 core + Earth Copper PVC Insulated / Steel Wire Armoured.
Standard Cast Iron terminal box *
Larger teminal boxes available, please refer to TECO.

Options

Some available options in this range are as follows:

- Airstream rated IC418
- Anti-condensation heaters
- Auxiliary terminal boxes for Thermistor / Heater / RTD terminations
- Electromechanical "fail safe" Brake Motors
- Cooling Tower application
- Crane rated motors
- Double / non standard shaft extensions
- Encoder / Tacho
- Ex e, Ex nA, Ex tD, IECEx certified Hazardous Area Motors
- Force ventilation IC416
- Induction Generators
- Insulated bearing
- IP66 enclosure
- Multi-speed motors
- Resistance temperature detectors (RTDs) winding and / or bearings
- Rotor Groundary brush
- Smoke spill to BS7436 to 185 kW
- Special paint systems / colours
- Stainless steel fasteners
- Thermistor protection (on motor frames <D160)
- Others on request

← RETURN TO INDEX

Typical Performance Data MAX-E2

TECO Cast Iron TEFC 3-Phase Squirrel Cage Induction Motors

63 to 315 Frame (415V 50Hz)

Output kW	Full Load Speed RPM	Frame Size	Efficiency			Power Factor			Current		Torque				Inertia		Noise Level dB(A)	Weight Foot Mount Kgs
			Full Load (%)	3/4 Load (%)	1/2 Load (%)	Full Load (%)	3/4 Load (%)	1/2 Load (%)	Full Load (A)	Locked Rotor (%)	Full Load N-m	Locked Rotor %FLT	Pull Up %FLT	Break-Down %FLT	Rotor J=GD²/4 Kg-m²	Max Load J=GD²/4 Kg-m²		
0.18	2740	63	61.0	59.5	55.0	77.5	69.0	57.0	0.55	455	0.63	330	330	330	0.0005	0.022	52	9
	1350	63	63.5	63.0	58.0	70.0	61.0	49.0	0.58	431	1.27	240	230	260	0.0008	0.103	48	11
	910	71	61.0	57.0	50.0	64.0	55.0	44.0	0.66	379	1.89	260	240	280	0.0018	0.175	45	12
	705	80	52.0	48.0	39.0	47.0	41.0	34.0	1.06	302	2.44	360	350	370	0.0025	0.543	44	16
0.37	2800	71	75.0	74.0	70.0	85.0	78.0	64.0	0.81	593	1.26	320	270	310	0.0008	0.043	54	12
	1405	71	74.5	73.0	68.5	69.5	60.5	48.0	1.00	530	2.51	325	270	305	0.0013	0.198	50	13
	920	80	72.5	72.0	68.5	72.0	62.5	49.0	0.99	535	3.84	230	215	240	0.0025	0.338	49	18
	710	90S	70.5	68.0	62.5	60.0	51.0	39.5	1.23	388	4.98	195	190	265	0.0045	1.04	49	22
0.55	2780	71	73.0	72.0	68.0	83.0	75.0	62.0	1.28	563	1.89	300	260	280	0.0008	0.062	53	16
	1405	80	71.5	70.5	65.0	74.0	65.0	52.0	1.47	524	3.74	260	230	280	0.0018	0.291	48	18
	910	80	68.0	68.0	63.0	72.0	62.0	49.0	1.59	365	5.77	230	210	230	0.0030	0.498	48	18
	690	90L	70.0	70.0	66.0	70.0	61.0	49.0	1.59	365	7.61	170	145	205	0.0058	1.54	47	27
0.75	2850	80**	82.4	83.0	81.0	83.0	76.0	60.0	1.53	784	2.51	380	310	370	0.0015	0.081	57	18
	1425	80	82.5	81.0	77.0	70.5	59.5	45.5	1.79	670	5.03	370	340	370	0.0033	0.353	50	18
	930	90S	78.0	77.0	75.0	68.0	59.0	45.5	1.97	508	7.70	210	200	250	0.0048	0.913	54	25
	695	100L**	76.5	76.0	72.5	60.0	51.0	39.0	2.27	441	10.3	230	215	230	0.0103	1.89	49	31
1.1	2815	80	83.8	83.0	81.0	82.0	75.0	60.0	2.23	762	3.73	320	280	340	0.0018	0.110	53	21
	1440	90S	84.0	84.0	82.5	77.5	69.0	55.0	2.35	766	7.30	250	190	270	0.0043	0.523	46	27
	930	90L	82.0	80.0	77.5	67.5	58.0	44.5	2.76	543	11.3	220	220	270	0.0065	1.40	42	26
	695	100L	78.0	79.5	77.0	64.5	55.5	43.0	3.04	493	15.1	210	200	215	0.0135	2.74	49	37
1.5	2885	90S	85.0	85.0	83.0	83.0	76.0	63.0	2.96	845	4.97	300	260	360	0.0028	0.145	54	24
	1450	90L	85.8	84.5	82.0	73.5	64.5	50.5	3.31	755	9.9	320	240	340	0.0058	0.670	46	30
	930	100L	83.0	83.0	81.0	73.0	65.0	52.0	3.44	523	15.4	220	190	220	0.0138	1.83	44	36
	705	112M	79.5	79.0	77.0	59.0	49.0	39.0	4.45	449	20.3	200	170	230	0.0178	3.65	49	45
2.2	2885	90L	87.1	86.5	85.0	85.0	79.0	67.0	4.13	896	7.28	290	250	360	0.0035	0.213	59	29
	1445	100L	86.5	85.5	84.0	82.5	74.5	60.5	4.29	862	14.5	260	180	310	0.0103	1.04	46	37
	950	112M	84.5	85.5	85.5	72.0	65.5	54.0	5.03	537	22.1	175	165	220	0.0208	2.68	44	43
	710	132S	82.0	81.5	79.0	65.0	56.0	43.0	5.74	523	29.6	250	230	280	0.0345	5.29	49	65
3	2870	100L**	88.5	88.5	87.5	86.5	81.5	70.5	5.45	972	9.98	350	330	350	0.0063	0.280	57	38
	1440	100L	87.6	87.5	87.0	83.5	78.0	65.0	5.71	788	19.9	240	170	290	0.0125	1.34	46	43
	965	132S**	88.5	88.5	88.0	77.0	70.0	58.0	6.12	670	29.7	190	180	290	0.0385	3.50	51	71
	710	132M	83.5	83.5	81.0	65.0	55.0	42.0	7.69	520	40.4	250	235	290	0.0405	6.97	50	75
4	2890	112M**	89.5	90.0	89.5	89.0	88.0	81.0	6.99	815	13.2	260	190	290	0.0115	0.383	57	48
	1450	112M	89.0	89.0	88.0	83.0	76.5	65.0	7.53	890	26.3	280	160	310	0.0208	1.81	48	48
	965	132M**	89.5	98.5	88.5	78.0	71.0	59.0	7.97	753	39.6	210	190	290	0.0513	4.75	51	87
	720	160M	84.5	84.0	81.5	73.0	65.0	52.5	9.02	554	53.1	200	180	250	0.0858	9.51	51	118
5.5	2930	132S**	91.5	92.0	91.0	86.0	82.0	73.0	9.72	885	17.9	230	210	320	0.0188	0.505	64	71
	1465	132S	90.5	90.5	89.5	79.0	72.0	59.5	10.7	794	35.9	260	190	280	0.0330	2.37	53	72
	960	132M**	89.0	89.5	89.5	81.0	76.0	65.5	10.6	623	54.7	190	180	270	0.0540	6.33	47	90
	715	160M	86.0	85.5	83.5	73.0	65.0	52.0	12.2	533	73.5	170	160	230	0.0858	12.7	54	118
7.5	2920	132S**	91.0	90.5	90.0	85.0	81.5	73.0	13.5	644	24.5	190	150	250	0.0188	0.670	64	84
	1465	132M	91.0	91.0	90.5	81.0	74.5	62.5	14.2	754	48.9	260	190	270	0.0430	3.10	56	82
	970	160M**	91.0	90.5	90.0	79.0	75.5	61.0	14.5	724	73.8	250	230	290	0.1258	8.34	55	138
	720	160L	87.5	87.0	85.0	72.0	64.0	51.0	16.6	572	99.5	195	185	270	0.1465	16.6	55	155

Notes:
1. All figures are based on tests carried out on 415 Volt3-Phase Motors.
2. Test Method: AS1359.5, Method B.
3. Tolerance: refer page 30
4. **** motors comply to MEPS 2006 High Efficiency requirements.**
5. dB(A): Mean Sound Pressure Level on no load at 1 metre.
6. Motor data 8 pole and slower speeds not listed available on request.
7. Data subject to change without notice.

← RETURN TO INDEX

Typical Performance Data MAX-E2

TECO Cast Iron TEFC 3-Phase Squirrel Cage Induction Motors

63 to 315 Frame (415V 50Hz)

Output kW	Full Load Speed RPM	Frame Size	Efficiency			Power Factor			Current		Torque				Inertia		Noise Level dB(A)	Weight Foot Mount Kgs
			Full Load (%)	3/4 Load (%)	1/2 Load (%)	Full Load (%)	3/4 Load (%)	1/2 Load (%)	Full Load (A)	Locked Rotor (%)	Full Load N-m	Locked Rotor %FLT	Pull Up %FLT	Break-Down %FLT	Rotor J=GD²/4 Kg-m²	Max Load J=GD²/4 Kg-m²		
11	2935	160M**	92.6	92.5	91.5	90.0	89.0	83.0	18.4	815	35.8	230	180	280	0.0458	0.97	70	128
	1460	160M**	92.5	91.0	90.5	83.5	80.0	72.0	19.8	732	72.0	230	190	250	0.0915	4.57	56	133
	970	160L	91.0	90.0	88.5	79.0	73.5	61.5	21.3	775	108	260	230	270	0.157	12.2	52	159
	720	180L	88.8	88.0	87.5	78.5	74.0	72.5	22.0	545	146	180	160	215	0.256	24.3	56	210
15	2935	160M**	92.8	92.5	92.0	90.0	87.5	80.0	25.0	840	48.8	240	200	300	0.0458	1.28	70	130
	1465	160L**	93.0	92.0	91.5	85.0	82.0	73.0	26.4	795	97.8	260	210	290	0.115	6.02	56	153
	975	180LC	91.6	91.5	91.5	82.5	79.0	70.0	27.6	641	147	230	190	230	0.334	15.9	58	215
	720	200LC	90.0	89.5	89.5	81.5	78.5	70.5	28.5	456	199	150	130	180	0.437	31.8	57	282
18.5	2945	160L**	93.1	92.5	92.5	92.0	90.5	85.0	30.0	917	60.0	260	180	300	0.0593	1.55	72	148
	1480	180MC**	94.0	93.5	93.0	82.5	78.0	67.0	33.2	678	119	190	150	230	0.176	7.42	63	194
	975	200LC**	93.0	92.5	92.0	81.5	78.0	69.5	34.0	647	181	220	190	220	0.457	19.7	55	285
	725	225SC	90.7	90.5	90.0	77.0	72.0	61.0	36.9	515	244	180	160	205	0.669	39.2	58	334
22	2940	180MA**	93.5	92.0	91.5	90.0	88.0	82.0	36.4	824	71.5	230	180	270	0.0708	1.89	72	194
	1480	180LC**	94.0	93.5	93.0	82.5	78.5	68.5	39.5	734	142	220	170	240	0.198	8.76	64	215
	975	200LC**	93.5	93.5	93.0	83.0	80.5	72.5	39.4	685	216	210	180	230	0.520	23.4	54	300
	735	225MC**	92.5	92.5	92.0	78.0	73.5	63.0	42.4	519	286	190	170	195	0.756	46.8	58	375
30	2960	200LA**	94.4	94.0	93.5	90.0	90.0	87.0	49.1	835	96.8	210	150	290	0.151	2.43	76	286
	1480	200LC**	94.5	94.0	93.5	87.5	84.5	77.0	50.5	844	194	230	200	260	0.354	11.5	64	300
	985	225MC**	94.0	93.5	93.0	84.0	82.0	73.0	52.9	680	291	220	190	220	0.756	30.5	61	390
	735	250SC	92.5	92.5	92.0	76.5	71.0	61.0	59.0	542	390	205	180	225	1.141	61.2	65	480
37	2955	200LA**	94.6	94.0	93.5	92.0	91.0	87.5	59.1	897	120	230	130	280	0.188	2.98	76	312
	1475	225SC**	95.0	94.5	94.0	86.0	82.5	74.0	63.0	762	240	210	180	290	0.474	14.1	69	359
	985	250SC**	94.0	94.0	93.5	86.5	83.0	75.5	63.3	671	359	210	190	250	1.049	37.8	64	480
	735	250MC	93.0	93.0	92.0	78.0	74.0	63.0	71.0	563	481	210	180	235	1.324	75.5	68	554
45	2960	225MA	94.5	94.0	93.5	93.0	92.5	90.0	71.2	815	145	155	130	280	0.311	3.53	78	373
	1475	225MC **	95.0	94.5	94.0	86.0	83.0	75.5	76.6	705	291	190	160	270	0.495	16.7	69	387
	985	250MC**	94.5	94.0	94.0	86.5	83.5	76.0	76.6	757	436	230	200	270	1.277	44.8	66	554
55	2970	250SA**	95.0	94.5	94.0	91.0	89.5	86.0	89.5	768	177	150	120	300	0.338	4.32	78	470
	1485	250SC**	95.5	95.0	94.5	87.0	84.5	78.5	92.1	782	354	260	180	240	0.978	20.3	71	528
	984	280SC**	95.0	94.5	94.0	85.0	82.5	75.0	95.0	679	534	165	140	230	2.125	55.0	77	650
75	2960	250MA**	95.6	95.0	94.5	91.5	90.5	88.0	119	748	242	150	140	300	0.453	5.60	78	548
	1485	250MC**	95.5	95.0	95.0	87.0	86.0	81.0	126	701	482	250	170	220	1.123	26.8	72	574
	984	280MC**	95.3	94.8	94.3	86.0	83.3	76.0	127	689	728	160	136	230	2.775	46.8	77	730
90	2960	280SA**	95.8	95.5	94.1	88.5	87.0	81.0	148	740	290	130	110	230	0.725	6.88	83	650
	1480	280SC	95.6	95.3	93.3	87.7	84.2	80.4	149	735	581	145	123	223	1.900	33.0	80	700
	984	315SC	95.3	94.6	92.4	85.9	81.8	74.7	153	716	873	142	116	214	4.050	88.2	77	920
110	2970	280MA**	95.8	95.5	94.1	89.2	87.5	81.0	179	732	354	120	102	230	0.825	8.08	83	700
	1482	280MC	95.8	95.2	94.4	88.0	84.5	78.5	182	720	709	155	131	230	2.35	39.0	80	850
	985	315MC**	95.8	95.3	94.8	86.2	84.0	76.5	185	708	1066	150	127	220	4.975	105	77	1010
132	2976	315SA**	96.1	95.5	94.3	89.5	87.8	82.0	214	720	424	115	97	220	1.325	9.13	83	840
	1485	315SC**	96.2	95.6	94.8	88.5	85.0	79.5	216	713	849	150	127	220	3.050	44.0	80	940
	986	315MC	95.8	95.1	92.7	86.2	82.2	75.4	222	694	1278	130	102	211	5.050	120	77	1050
150	2982	315MA**	96.2	95.6	93.5	90.4	88.6	86.0	240	729	480	106	92	214	1.625	10.5	83	920
	1488	315MC	96.2	95.6	94.8	88.5	85.0	80.0	245	714	963	150	127	220	3.550	50.5	80	930
185	2982	315MA	96.2	95.6	93.5	90.7	88.8	86.4	295	729	592	105	91	211	1.975	12.8	83	1000
	1488	315MB	96.2	95.6	94.8	89.0	85.6	80.5	301	714	1187	140	119	220	3.700	61.8	80	1100

Notes:
1. All figures are based on tests carried out on 415 Volt3-Phase Motors.
2. Test Method: AS1359.5, Method B.
3. Tolerance: refer page 30
4. **** motors comply to MEPS 2006 High Efficiency requirements.**
5. dB(A): Mean Sound Pressure Level on no load at 1 metre.
6. Motor data 8 pole and slower speeds not listed available on request.
7. Data subject to change without notice.

← RETURN TO INDEX

Outline Dimensions Sheet MAX-E2

TECO Cast Iron TEFC 3-Phase Squirrel Cage Induction Motors

Frame 63 - 132 Foot Mount

Totally Enclosed Fan Cooled Squirrel Cage Rotor

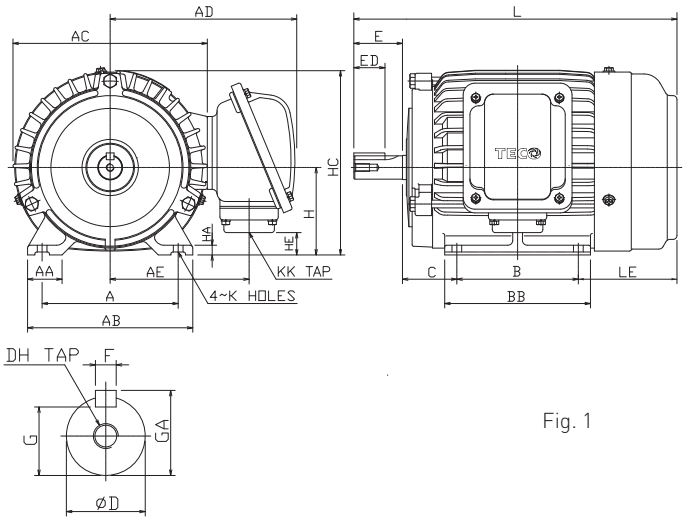

Fig. 1

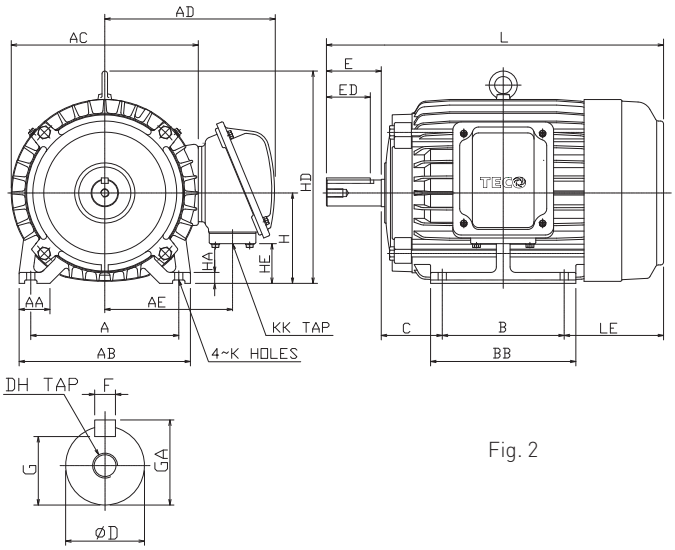

Fig. 2

Output (kW)				Frame Size	Fig. No.	Dimensions (mm)												
2P	4P	6P	8P			A	AA	AB	AC	AD	AE	B	BB	C	H	HA	HC	HD
0.18	0.18	-	-	63	1	100	28	120	144	138	100	80	100	40	63	8	135	-
0.37 / 0.55	0.37	0.18	-	71		112	35.5	140	162	148	110	90	115	45	71	8	152	-
0.75 / 1.1	0.55 / 0.75	0.37 / 0.55	0.18	80		125	35.5	155	177	179	130	100	130	50	80	9	168	-
1.5	1.1	0.75	0.37	90S		140	35.5	170	200	192	143	100	130	56	90	10	190	-
2.2	1.5	1.1	0.55	90L		140	35.5	170	200	192	143	125	150	56	90	10	190	-
3	2.2 / 3	1.5	0.75 / 1.1	100L	2	160	45	195	219	202	153	140	175	63	100	12.5	-	243
4	4	2.2	1.5	112M		190	45	224	238	211	162	140	175	70	112	14	-	265
5.5 / 7.5	5.5	3	2.2	132S		216	45	250	273	249	187	140	175	89	132	16	-	310
-	7.5	4 / 5.5	3	132M		216	45	250	273	249	187	178	212	89	132	16	-	310

Frame Size						Shaft Extension							Bearings	
	HE	K	KK	L	LE	D	E	ED	F	G	GA	DH	DE	NDE
63	10	7	M20 × P1.5	219	76	11	23	18	4	8.5	12.5	M4 × 8	6201ZZ	6201ZZ
71	35	7	M20 × P1.5	250.5	85.5	14	30	24	5	11	16	M5 × 10	6202ZZ	6202ZZ
80	13	10	M25 × P1.5	282.5	92.5	19	40	25	6	15.5	21.5	M6 × 12	6204ZZ	6204ZZ
90S	23	10	M25 × P1.5	307.5	101.5	24	50	32	8	20	27	M8 × 16	6205ZZ	6205ZZ
90L	23	10	M25 × P1.5	332.5	101.5	24	50	32	8	20	27	M8 × 16	6205ZZ	6205ZZ
100L	33	12	M25 × P1.5	374.5	111.5	28	60	40	8	24	31	M10 × 20	6206ZZ	6305ZZ
112M	45	12	M25 × P1.5	391.5	121.5	28	60	40	8	24	31	M10 × 20	6306ZZ	6306ZZ
132S	58	12	M40 × P1.5	454	145	38	80	56	10	33	41	M12 × 24	6308ZZ	6306ZZ
132M	58	12	M40 × P1.5	492	145	38	80	56	10	33	41	M12 × 24	6308ZZ	6306ZZ

Notes:
1. Tolerance: Refer to page 30.
2. Data subject to change without notice and should not be used for installation purposes.
3. Lifting Lugs not provided on frames D90 and smaller.

← RETURN TO INDEX

Outline Dimensions Sheet MAX-E2

TECO Cast Iron TEFC 3-Phase Squirrel Cage Induction Motors

Frame 160 - 250 Foot Mount

Totally Enclosed Fan Cooled Squirrel Cage Rotor

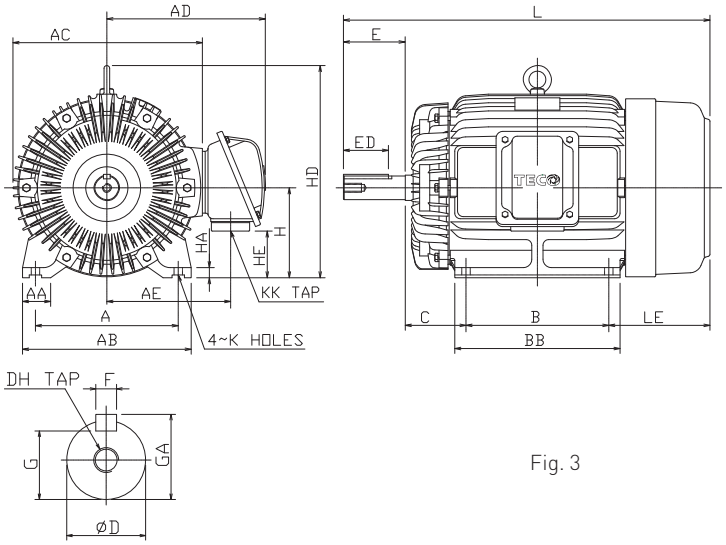

Fig. 3

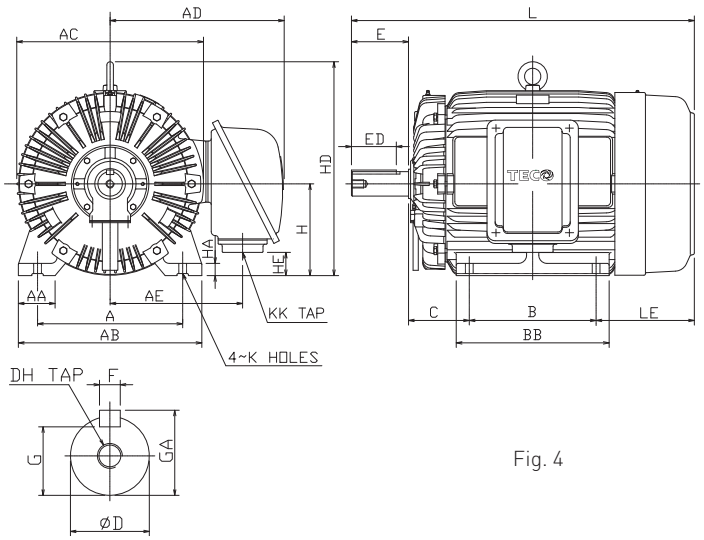

Fig. 4

Output (kW)				Frame Size	Fig. No.	Dimensions (mm)											
2P	4P	6P	8P			A	AA	AB	AC	AD	AE	B	BB	C	H	HA	HD
11 / 15	11	7.5	4 / 5.5	160M	3	254	50	300	334	287	225	210	250	108	160	18	377
18.5	15	11	7.5	160L		254	50	300	334	287	225	254	300	108	160	18	377
22	-	-	-	180MA	4	279	75	355	382	312	250	241	297	121	180	20	421
-	18.5	-	-	180MC	3	279	75	355	382	312	250	241	297	121	180	20	421
-	22	15	11	180LC		279	75	355	382	312	250	279	335	121	180	20	421
30 / 37	-	-	-	200LA	4	318	80	400	420	374	287	305	365	133	200	25	469
-	30	18.5 / 22	15	200LC		318	80	400	420	374	287	305	365	133	200	25	469
-	37	-	18.5	225SC		356	90	450	458	427	330	286	350	149	225	30	524
45	-	-	-	225MA		356	90	450	458	427	330	311	375	149	225	30	524
-	45	30	22	225MC		356	90	450	458	427	330	311	375	149	225	30	524
55	-	-	-	250SA		406	100	500	510	493	375	311	385	168	250	36	575
-	55	37	30	250SC		406	100	500	510	493	375	311	385	168	250	36	575
75	-	-	-	250MA		406	100	500	510	493	375	349	425	168	250	36	575
-	75	45	37	250MC		406	100	500	510	493	375	349	425	168	250	36	575

Frame Size						Shaft Extension							Bearings	
	HE	K	KK	L	LE	D	E	ED	F	G	GA	DH	DE	NDE
160M	83	14.5	M40 × P1.5	608	180	42	110	80	12	37	45	M16 × 32	6309ZZ	6307ZZ
160L	83	14.5	M40 × P1.5	652	180	42	110	80	12	37	45	M16 × 32	6309ZZ	6307ZZ
180MA	103	14.5	M40 × P1.5	672	200	48	110	80	14	42.5	51.5	M16 × 32	(6211C3)	(6211C3)
180MC	103	14.5	M40 × P1.5	672	200	48	110	80	14	42.5	51.5	M16 × 32	6311ZZ	6310ZZ
180LC	103	14.5	M40 × P1.5	710	200	48	110	80	14	42.5	51.5	M16 × 32	6311ZZ	6310ZZ
200LA	88	18.5	M50 × P1.5	770	222	55	110	80	16	49	59	M20 × 40	(6312C3)	(6212C3)
200LC	88	18.5	M50 × P1.5	770	222	55	110	80	16	49	59	M20 × 40	6312	6212
225SC	57	18.5	M50 × P1.5	816	241	60	140	110	18	53	64	M20 × 40	6313	6213
225MA	57	18.5	M50 × P1.5	811	241	55	110	80	16	49	59	M20 × 40	(6312C3)	(6212C3)
225MC	57	18.5	M50 × P1.5	841	241	60	140	110	18	53	64	M20 × 40	6313	6213
250SA	42	24	M63 × P1.5	882.5	263.5	60	140	110	18	53	64	M20 × 40	(6313C3)	(6213C3)
250SC	42	24	M63 × P1.5	882.5	263.5	70	140	110	20	62.5	74.5	M20 × 40	NU316	6313
250MA	42	24	M63 × P1.5	920.5	263.5	60	140	110	18	53	64	M20 × 40	(6313C3)	(6213C3)
250MC	42	24	M63 × P1.5	920.5	263.5	70	140	110	20	62.5	74.5	M20 × 40	NU316	6313

Notes:
1. Tolerance: Refer to page 30.
2. Data subject to change without notice and should not be used for installation purposes.

← RETURN TO INDEX

Outline Dimensions Sheet MAX-E2

TECO Cast Iron TEFC 3-Phase Squirrel Cage Induction Motors

Frame 280 - 315M Foot Mount

Totally Enclosed Fan Cooled Squirrel Cage Rotor

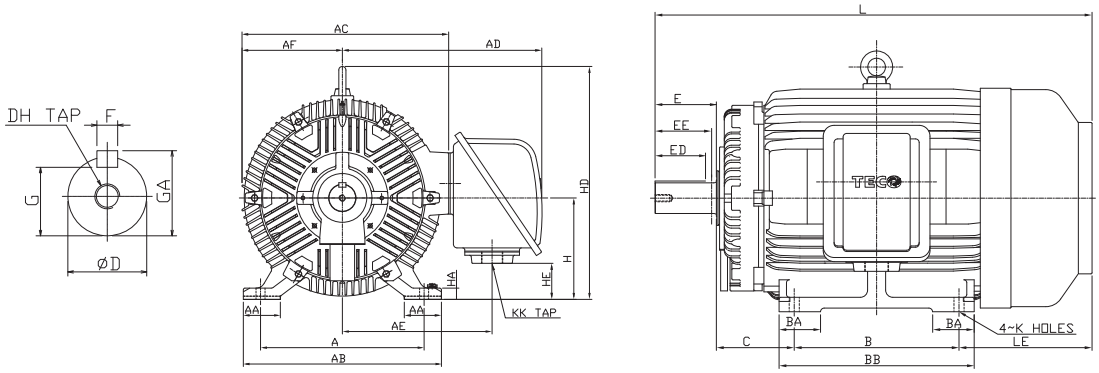

Output (kW)				Frame Size	Dimensions (mm)												
2P	4P	6P	8P		A	AA	AB	AC	AD	AE	AF	B	BA	BB	C	H	HA
90	-	-	-	280SA	457	110	560	603	600	445	293	368	110	445	190	280	30
-	90	55	45	280SC	457	110	560	603	600	445	293	368	110	445	190	280	30
110	-	-	-	280MA	457	110	560	603	600	445	293	419	130	495	190	280	30
-	110	75	55	280MC	457	110	560	603	600	445	293	419	130	495	190	280	30
132	-	-	-	315SA	508	115	615	642	620	465	312	406	115	490	216	315	35
-	132	90	75	315SC	508	115	615	642	620	465	312	406	115	490	216	315	35
150 / 185	-	-	-	315MA	508	115	615	642	620	465	312	457	115	540	216	315	35
-	150	110 / 132	90	315MC	508	115	615	642	620	465	312	457	115	540	216	315	35
-	185	-	-	315MB	508	115	615	642	620	465	312	457	115	540	216	315	35
-	185	-	-	315MC**	508	115	615	642	703	482	312	457	115	540	216	315	35

Frame Size							Shaft Extension								Bearings	
	HD	HE	K	KK	L	LE	D	E	ED	EE	F	G	GA	DH	DE	NDE
280SA	651	82	24	M63x1.5	1042	344	65	140	110	134	18	58	69	M20x30	6314C3	6314C3
280SC	651	82	24	M63x1.5	1072	344	80	170	140	157	22	71	85	M20x30	NU318	6316
280MA	651	82	24	M63x1.5	1092	343	65	140	110	134	18	58	69	M20x30	6314C3	6314C3
280MC	651	82	24	M63x1.5	1122	343	80	170	140	157	22	71	85	M20x30	NU318	6316
315SA	723	112	28	M63x1.5	1131	369	65	140	110	134	18	58	69	M20x30	6314C3	6314C3
315SC	723	112	28	M63x1.5	1161	369	85	170	140	157	22	76	90	M20x30	NU320	6316
315MA	723	112	28	M63x1.5	1182	369	65	140	110	134	18	58	69	M20x30	6314C3	6314C3
315MC	723	112	28	M63x1.5	1212	369	85	170	140	157	22	76	90	M20x30	NU320	6316
315MB	723	112	28	M63x1.5	1212	369	85	170	140	157	22	76	90	M20x30	NU320	6316
315MC**	723	112	28	BLANK	1212	369	95	170	140	157	25	86	100	M24x48	NU320	6316

Notes:
1. Tolerance refer to page 30.
2. Usable Shaft Length: EE
3. ** 185kW motor in D315MC frame with fabricated steel terminal box and oversize DE shaft.
4. Data subject to change without notice and should not be used for installation purposes.

MAX-E2 Motor
FRAME SIZES D280-315M

← RETURN TO INDEX

Outline Dimensions Sheet MAX-E2

TECO Cast Iron TEFC 3-Phase Squirrel Cage Induction Motors

Frame 63 - 132 Flange Mount

Totally Enclosed Fan Cooled Squirrel Cage Rotor

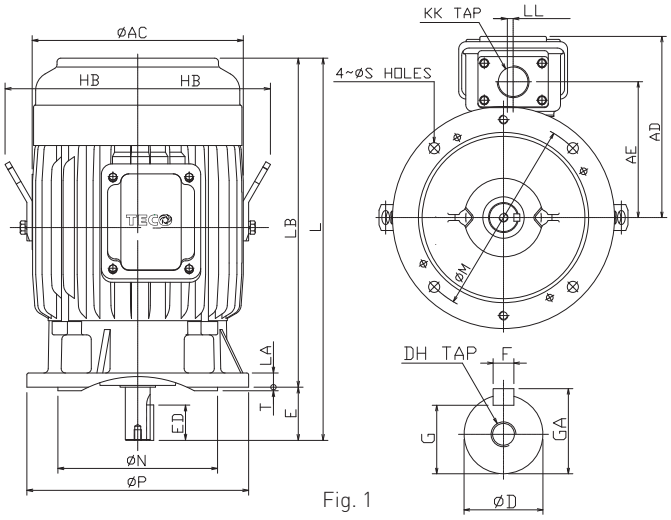

Fig. 1

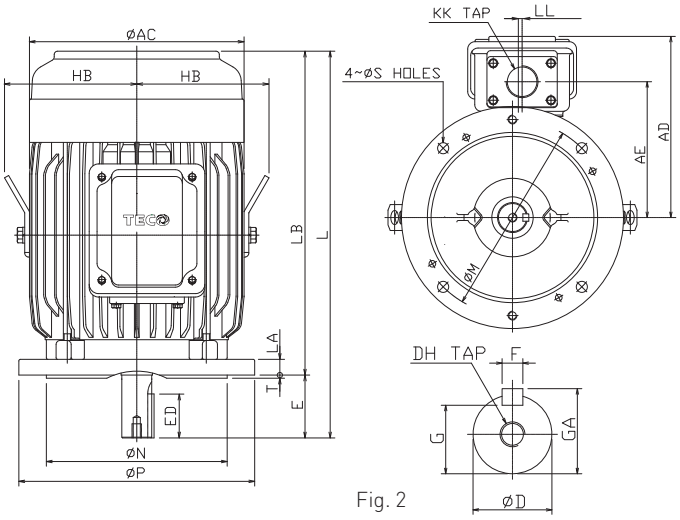

Fig. 2

Output (kW)				Frame Size	Fig. No.	Dimensions (mm)									Flange		
2P	4P	6P	8P			AC	AD	AE	HB	KK	L	LA	LB	LL	M	N	P
0.18	0.18	-	-	63	1	144	138	100	-	M20 × P1.5	225	12	235	0	115	95	140
0.37 / 0.55	0.37	0.18	-	71		162	148	110	-	M20 × P1.5	278	12	248	17	130	110	160
0.75 / 1.1	0.55 / 0.75	0.37 / 0.55	0.18	80	2	177	179	130	-	M25 × P1.5	280	12	240	15	165	130	200
1.5	1.1	0.75	0.37	90S	1	200	192	143	-	M25 × P1.5	347	12	297	15	165	130	200
2.2	1.5	1.1	0.55	90L		200	192	143	-	M25 × P1.5	372	12	322	15	165	130	200
3	2.2 / 3	1.5	0.75 / 1.1	100L	2	219	202	153	140	M25 × P1.5	375	16	315	15	215	180	250
4	4	2.2	1.5	112M	1	238	211	162	150	M25 × P1.5	431	16	371	15	215	180	250
5.5 / 7.5	5.5	3	2.2	132S	2	273	249	187	169	M40 × P1.5	454	20	374	13	265	230	300
-	7.5	4 / 5.5	3	132M		273	249	187	169	M40 × P1.5	484	20	404	13	265	230	300

Frame Size	Flange		Shaft Extension							Bearings	
	S	T	D	E	ED	F	G	GA	DH	DE	NDE
63	10	3	11	23	18	4	8.5	12.5	M4 × 8	6201ZZ	6201ZZ
71	10	3.5	14	30	24	5	11	16	M5 × 10	6202ZZ	6202ZZ
80	12	3.5	19	40	25	6	15.5	21.5	M6 × 12	6204ZZ	6204ZZ
90S	12	3.5	24	50	32	8	20	27	M8 × 16	6205ZZ	6205ZZ
90L	12	3.5	24	50	32	8	20	27	M8 × 16	6205ZZ	6205ZZ
100L	14.5	4	28	60	40	8	24	31	M10 × 20	6206ZZ	6305ZZ
112M	14.5	4	28	60	40	8	24	31	M10 × 20	6306ZZ	6306ZZ
132S	14.5	4	38	80	56	10	33	41	M12 × 24	6308ZZ	6306ZZ
132M	14.5	4	38	80	56	10	33	41	M12 × 24	6308ZZ	6306ZZ

Notes:
1. Tolerance: Refer to page 30.
2. Lifting lugs not provided on frames D90 and smaller.
3. Data subject to change without notice and should not be used for installation purposes.

← RETURN TO INDEX

Outline Dimensions Sheet MAX-E2

TECO Cast Iron TEFC 3-Phase Squirrel Cage Induction Motors

Frame 160 - 250 Flange Mount

Totally Enclosed Fan Cooled Squirrel Cage Rotor

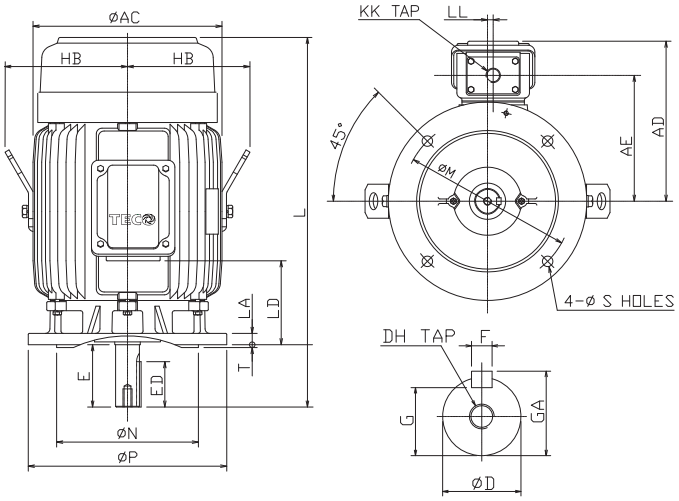

Fig. 3

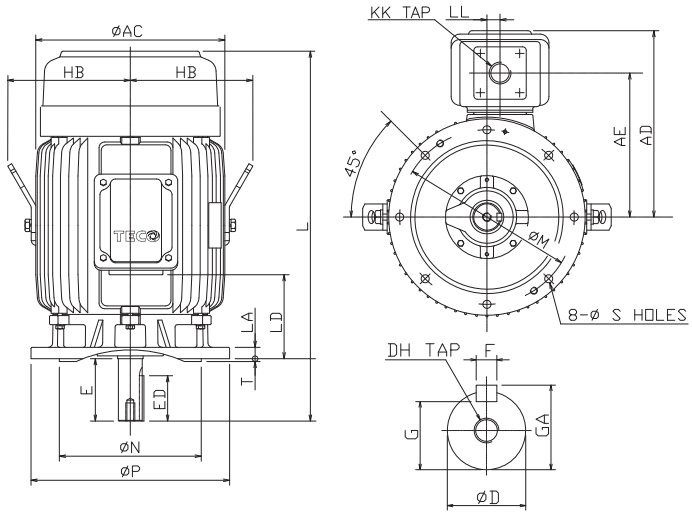

Fig. 4

Output (kW)				Frame Size	Fig. No.	Dimensions (mm)									Flange		
2P	4P	6P	8P			AC	AD	AE	HB	KK	L	LA	LD	LL	M	N	P
11 / 15	11	7.5	4 / 5.5	160M		334	287	225	217	M40 × P1.5	608	20	126	10	300	250	350
18.5	15	11	7.5	160L		334	287	225	217	M40 × P1.5	652	20	148	10	300	250	350
22				180MA		382	312	250	241	M40 × P1.5	672	20	155	10	300	250	350
	18.5			180MC	3	382	312	250	241	M40 × P1.5	672	20	155	10	300	250	350
	22	15	11	180LC		382	312	250	241	M40 × P1.5	710	20	174	10	300	250	350
30 / 37				200LA		420	374	287	260	M50 × P1.5	770	20	154	20	350	300	400
	30	18.5 / 22	15	200LC		420	374	287	260	M50 × P1.5	770	20	154	20	350	300	400
	37		18.5	225SC		458	427	330	286	M50 × P1.5	816	22	94	30	400	350	450
45				225MA		458	427	330	286	M50 × P1.5	811	22	107	30	400	350	450
	45	30	22	225MC		458	427	330	286	M50 × P1.5	841	22	107	30	400	350	450
55				250SA	4	510	493	375	312	M63 × P1.5	882.5	22	86	30	500	450	550
	55	37	30	250SC		510	493	375	312	M63 × P1.5	882.5	22	86	30	500	450	550
75				250MA		510	493	375	312	M63 × P1.5	920.5	22	105	30	500	450	550
	75	45	37	250MC		510	493	375	312	M63 × P1.5	920.5	22	105	30	500	450	550

Frame Size	Flange		Shaft Extension							Bearings	
	S	T	D	E	ED	F	G	GA	DH	DE	NDE
160M	18.5	5	42	110	80	12	37	45	M16 × 32	6309ZZ	6307ZZ
160L	18.5	5	42	110	80	12	37	45	M16 × 32	6309ZZ	6307ZZ
180MA	18.5	5	48	110	80	14	42.5	51.5	M16 × 32	6211C3	6211C3
180MC	18.5	5	48	110	80	14	42.5	51.5	M16 × 32	6311ZZ	6310ZZ
180LC	18.5	5	48	110	80	14	42.5	51.5	M16 × 32	6311ZZ	6310ZZ
200LA	18.5	5	55	110	80	16	49	59	M20 × 40	6312C3	6212C3
200LC	18.5	5	55	110	80	16	49	59	M20 × 40	6312	6212
225SC	18.5	5	60	140	110	18	53	64	M20 × 40	6313	6213
225MA	18.5	5	55	110	80	16	49	59	M20 × 40	6312C3	6212C3
225MC	18.5	5	60	140	110	18	53	64	M20 × 40	6313	6213
250SA	18.5	5	60	140	110	18	53	64	M20 × 40	6313C3	6213C3
250SC	18.5	5	70	140	110	20	62.5	74.5	M20 × 40	NU316	6313
250MA	18.5	5	60	140	110	18	53	64	M20 × 40	6313C3	6213C3
250MC	18.5	5	70	140	110	20	62.5	74.5	M20 × 40	NU316	6313

Notes:
1. Tolerance: Refer to page 30.
2. Data subject to change without notice and should not be used for installation purposes.

← RETURN TO INDEX

Outline Dimensions Sheet MAX-E2

TECO Cast Iron TEFC 3-Phase Squirrel Cage Induction Motors

Frame 63 - 200 Foot and Flange Mount

Totally Enclosed Fan Cooled Squirrel Cage Rotor

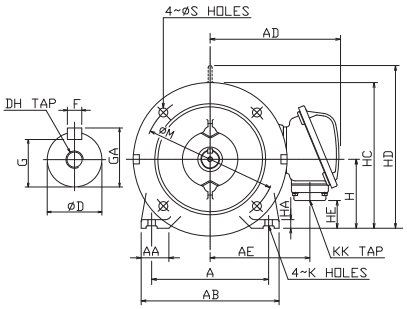

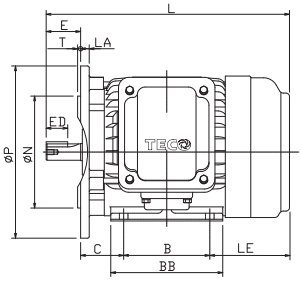

Fig. 1

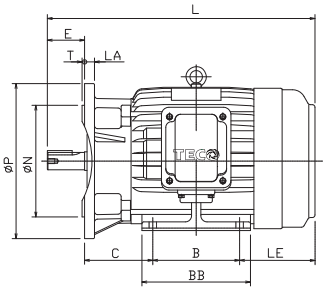

Fig. 2

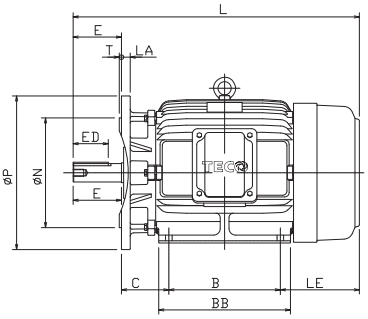

Fig. 3

Output (kW)				Frame Size	Fig. No.	Dimensions (mm)														
2P	4P	6P	8P			A	AA	AB	AD	AE	B	BB	C	H	HA	HC	HD	HE	K	KK
0.18	0.18	-	-	63	2	100	28	120	123	97	80	100	69	63	8	135	-	10	7	M20 × P1.5
0.37 / 0.55	0.37	0.18	-	71		112	35.5	140	148	110	90	115	72	71	8	152	-	35	7	M20 × P1.5
0.75 / 1.1	0.55 / 0.75	0.37 / 0.55	0.18	80	1	125	35.5	155	179	130	100	130	50	80	9	180	-	13	10	M25 × P1.5
1.5	1.1	0.75	0.37	90S	2	140	35.5	170	192	143	100	130	95	90	10	190	-	23	10	M25 × P1.5
2.2	1.5	1.1	0.55	90L		140	35.5	170	192	143	125	150	95	90	10	190	-	23	10	M25 × P1.5
3	2.2 / 3	1.5	0.75 / 1.1	100L		160	45	195	202	153	140	175	103	100	12.5	-	243	33	12	M25 × P1.5
4	4	2.2	1.5	112M		190	45	224	211	162	140	175	110	112	14	-	265	45	12	M25 × P1.5
5.5 / 7.5	5.5	3	2.2	132S		216	45	250	249	187	140	175	139	132	16	-	310	58	12	M40 × P1.5
-	7.5	4 / 5.5	3	132M		216	45	250	249	187	178	212	139	132	16	-	310	58	12	M40 × P1.5
11 / 15	11	7.5	4 / 5.5	160M	3	254	50	300	287	225	210	250	108	160	18	-	377	83	14.5	M40 × P1.5
18.5	15	11	7.5	160L		254	50	300	287	225	254	300	108	160	18	-	377	83	14.5	M40 × P1.5
22	-	-	-	180MA		279	75	355	312	250	241	297	121	180	20	-	421	103	14.5	M40 × P1.5
-	18.5	-	-	180MC		279	75	355	312	250	241	297	121	180	20	-	421	103	14.5	M40 x P1.5
-	22	15	11	180LC		279	75	355	312	250	279	335	121	180	20	-	421	103	14.5	M40 × P1.5
30/37	-	-	-	200LA		318	80	400	374	287	305	365	133	200	25	-	469	88	18.5	M50 × P1.5
-	30	18.5 / 22	15	200LC		318	80	400	374	287	305	365	133	200	25	-	469	88	18.5	M50 × P1.5

Frame Size				Flange					Shaft Extension							Bearings	
	LA	LE	L	M	N	P	S	T	D	E	ED	F	G	GA	DH	DE	NDE
63	12	76	248	115	95	140	10	3	11	23	10	4	8.5	12.5	M4 × 8	6201ZZ	6201ZZ
71	12	86	278	130	110	160	10	3.5	14	30	14	5	11	16	M5 × 10	6202ZZ	6202ZZ
80	12	92.5	282.5	165	130	200	12	3.5	19	40	25	6	15.5	21.5	M6 × 12	6204ZZ	6204ZZ
90S	12	101.5	346.5	165	130	200	12	3.5	24	50	32	8	20	27	M8 × 16	6205ZZ	6205ZZ
90L	12	101.5	371.5	165	130	200	12	3.5	24	50	32	8	20	27	M8 × 16	6205ZZ	6205ZZ
100L	16	112	414.5	215	180	250	14.5	4	28	60	40	8	24	31	M10 × 20	6206ZZ	6305ZZ
112M	16	121.5	431.5	215	180	250	14.5	4	28	60	40	8	24	31	M10 × 20	6306ZZ	6306ZZ
132S	20	145	504	265	230	300	14.5	4	38	80	56	10	33	41	M12 × 24	6308ZZ	6306ZZ
132M	20	145	542	265	230	300	14.5	4	38	80	56	10	33	41	M12 × 24	6308ZZ	6306ZZ
160M	20	180	608	300	250	350	18.5	5	42	110	80	12	37	45	M16 × 32	6309ZZ	6307ZZ
160L	20	180	652	300	250	350	18.5	5	42	110	80	12	37	45	M16 × 32	6309ZZ	6307ZZ
180MA	20	200	672	300	250	350	18.5	5	48	110	80	14	42.5	51.5	M16 × 32	(6211C3)	(6211C3)
180MC	20	200	672	300	250	350	18.5	5	48	110	80	14	42.5	51.5	M16 × 32	6311ZZ	6310ZZ
180LC	20	200	710	300	250	350	18.5	5	48	110	80	14	42.5	51.5	M16 × 32	6311ZZ	6310ZZ
200LA	20	222	770	350	300	400	18.5	5	55	110	80	16	49	59	M20 × 40	(6312C3)	(6212C3)
200LC	20	222	770	350	300	400	18.5	5	55	160	80	16	49	59	M20 × 40	6312C3	6212C3

Notes:
1. Tolerance: Refer to page 30.
2. Lifting lugs not provided on frames D90 and smaller.
3. Data subject to change without notice and should not be used for installation purposes.

← RETURN TO INDEX

Outline Dimensions Sheet MAX-E2

TECO Cast Iron TEFC 3-Phase Squirrel Cage Induction Motors

Frame 225 - 315M Foot and Flange Mount

Totally Enclosed Fan Cooled Squirrel Cage Rotor

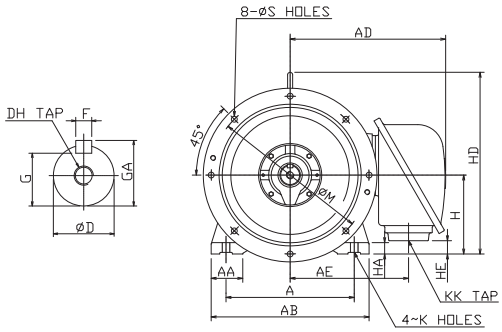

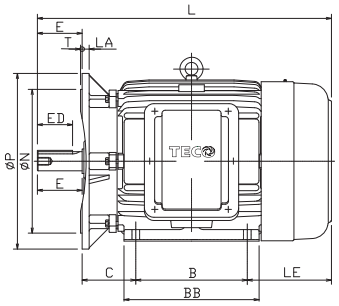

Fig. 4

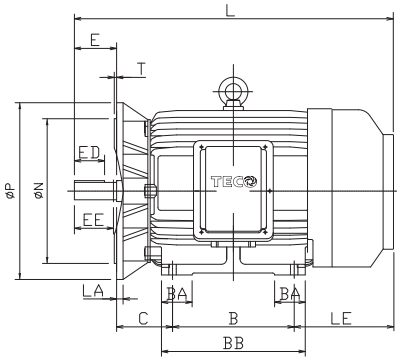

Fig. 5

Output (kW)				Frame Size	Fig. No.	Dimensions (mm)														
2P	4P	6P	8P			A	AA	AB	AD	AE	B	BA	BB	C	H	HA	HD	HE	K	KK
-	37	-	18.5	225SC		356	90	450	427	330	286	-	350	149	225	30	524	57	18.5	M50 × P1.5
45	-	-	-	225MA		356	90	450	427	330	311	-	375	149	225	30	524	57	18.5	M50 × P1.5
-	45	30	22	225MC		356	90	450	427	330	311	-	375	149	225	30	524	57	18.5	M50 × P1.5
55	-	-	-	250SA	4	406	100	500	493	375	311	-	385	168	250	36	575	42	24	M63 × P1.5
-	55	37	30	250SC		406	100	500	493	375	311	-	385	168	250	36	575	42	24	M63 × P1.5
75	-	-	-	250MA		406	100	500	493	375	349	-	425	168	250	36	575	42	24	M63 × P1.5
-	75	45	37	250MC		406	100	500	493	375	349	-	425	168	250	36	575	42	24	M63 × P1.5
90	-	-	-	280SA		457	110	560	600	445	368	110	445	190	280	30	651	82	24	M63 × P1.5
-	90	55	45	280SC		457	110	560	600	445	368	110	445	190	280	30	651	82	24	M63 × P1.5
110	-	-	-	280MA		457	110	560	600	445	419	110	495	190	280	30	651	82	24	M63 × P1.5
-	110	75	55	280MC		457	110	560	600	445	419	110	495	190	280	30	651	82	24	M63 × P1.5
132	-	-	-	315SA	5	508	115	615	600	465	406	115	490	216	315	35	723	112	28	M63 × P1.5
-	132	90	75	315SC		508	115	615	600	465	406	115	490	216	315	35	723	112	28	M63 × P1.5
150 / 185	-	-	-	315MA		508	115	615	600	465	457	115	540	216	315	35	723	112	28	M63 × P1.5
-	150	110 / 132	90	315MC		508	115	615	600	465	457	115	540	216	315	35	723	112	28	M63 × P1.5
-	185	-	-	315MB		508	115	615	600	465	457	115	540	216	315	35	723	112	28	M63 × P1.5

Frame Size				Flange					Shaft Extension								Bearings	
	LA	LE	L	M	N	P	S	T	D	E	ED	EE	F	G	GA	DH	DE	NDE
225SC	22	241	816	400	350	450	18.5	5	60	140	110	-	18	53	64	M20 × 40	6313	6213
225MA	22	241	811	400	350	450	18.5	5	55	110	80	-	16	49	59	M20 × 40	6312C3	6212C3
225MC	22	241	841	400	350	450	18.5	5	60	140	110	-	18	53	64	M20 × 40	6313	6213
250SA	22	263.5	882.5	500	450	550	18.5	5	60	140	110	-	18	53	64	M20 × 40	6313C3	6213C3
250SC	22	263.5	882.5	500	450	550	18.5	5	70	140	110	-	20	62.5	74.5	M20 × 40	NU316	6313
250MA	22	263.5	920.5	500	450	550	18.5	5	60	140	110	-	18	53	64	M20 × 40	6313C3	6213C3
250MC	22	263.5	920.5	500	450	550	18.5	5	70	140	110	-	20	62.5	74.5	M20 × 40	NU316	6313
280SA	22	344	1042	500	450	550	18.5	5	65	140	110	134	18	58	69	M20 × 40	6314C3	6314C3
280SC	22	344	1072	500	450	550	18.5	5	80	170	140	157	22	71	85	M20 × 40	NU318	6316
280MA	22	344	1092	500	450	550	18.5	5	65	140	110	134	18	58	69	M20 × 40	6314C3	6314C3
280MC	22	344	1122	500	450	550	18.5	5	80	170	140	157	22	71	85	M20 × 40	NU318	6316
315SA	25	369	1131	600	550	660	24	6	65	140	110	134	18	58	69	M20 × 40	6314C3	6314C3
315SC	25	369	1161	600	550	660	24	6	85	170	140	157	22	76	90	M20 × 40	NU320	6316
315MA	25	369	1182	600	550	660	24	6	65	140	110	134	18	58	69	M20 × 40	6314C3	6314C3
315MC	25	369	1212	600	550	660	24	6	85	170	140	157	22	76	90	M20 × 40	NU320	6316
315MB	25	369	1212	600	550	660	24	6	85	140	140	157	22	76	90	M20 × 40	NU320	6316

Notes:
1. Tolerance: Refer to page 30.
2. Usable Shaft length: EE
3. Data subject to change without notice and should not be used for installation purposes.

← RETURN TO INDEX

Outline Dimensions Sheet MAX-E2

TECO Cast Iron TEFC 3-Phase Squirrel Cage Induction Motors

Frame 63 - 132 Foot and C Face Mount

Totally Enclosed Fan Cooled Squirrel Cage Rotor

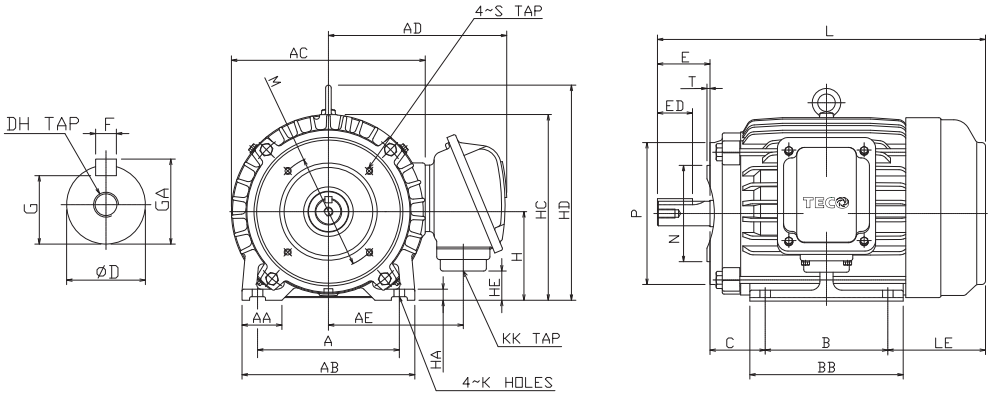

Fig. 1

Output (kW)				Frame Size	Fig. No.	Dimensions (mm)															
2P	4P	6P	8P			A	AA	AB	AC	AD	AE	B	BB	C	H	HA	HC	HD	HE	K	KK
0.18	0.18	-	-	63		100	28	120	144	138	100	80	100	40	63	8	135	-	10	7	M20 × P1.5
0.37 / 0.55	0.37	0.18	-	71		112	35.5	140	162	148	110	90	115	45	71	8	152	-	35	7	M20 × P1.5
0.75 / 1.1	0.55 / 0.75	0.37 / 0.55	0.18	80		125	35.5	155	177	179	130	100	130	50	80	9	168	-	13	10	M25 × P1.5
1.5	1.1	0.75	0.37	90S		140	35.5	170	200	192	143	100	130	56	90	10	190	-	23	10	M25 × P1.5
2.2	1.5	1.1	0.55	90L	1	140	35.5	170	200	192	143	125	150	56	90	10	190	-	23	10	M25 × P1.5
3	2.2 / 3	1.5	0.75 / 1.1	100L		160	45	195	219	202	153	140	175	63	100	12.5	-	243	33	12	M25 × P1.5
4	4	2.2	1.5	112M		190	45	224	238	211	162	140	175	70	112	14	-	265	45	12	M25 × P1.5
5.5 / 7.5	5.5	3	2.2	132S		216	45	250	273	249	187	140	175	89	132	16	-	310	58	12	M40 × P1.5
-	7.5	4 / 5.5	3	132M		216	45	250	273	249	187	178	212	89	132	16	-	310	58	12	M40 × P1.5

Frame Size			Flange					Shaft Extension							Bearings	
	L	LE	M	N	P	S	T	D	E	ED	F	G	GA	DH	DE	NDE
63	219	76	75	60	90	M5	3	11	23	18	4	8.5	12.5	M4 × 8	6201ZZ	6201ZZ
71	250.5	85.5	85	70	105	M6	3.5	14	30	24	5	11	16	M5 × 10	6202ZZ	6202ZZ
80	282.5	92.5	100	80	120	M6	3.5	19	40	25	6	15.5	21.5	M6 × 12	6204ZZ	6204ZZ
90S	307.5	101.5	115	95	140	M8	3.5	24	50	32	8	20	27	M8 × 16	6205ZZ	6205ZZ
90L	332.5	101.5	115	95	140	M8	3.5	24	50	32	8	20	27	M8 × 16	6205ZZ	6205ZZ
100L	374.5	111.5	130	110	160	M8	4	28	60	40	8	24	31	M10 × 20	6206ZZ	6305ZZ
112M	391.5	121.5	130	110	160	M8	4	28	60	40	8	24	31	M10 × 20	6306ZZ	6306ZZ
132S	145	454	165	130	200	M10	4	38	80	64	10	33	41	M12 × 24	6308ZZ	6306ZZ
132M	145	492	165	130	200	M10	4	38	80	64	10	33	41	M12 × 24	6308ZZ	6306ZZ

Notes:
1. Tolerance: Refer to page 30.
2. Lifting lugs not provided on frames D90 and smaller.
3. Data subject to change without notice and should not be used for installation purposes.

← RETURN TO INDEX

Mechanical Design

Axial / Radial Loadings

The table below gives the permissible axial and radial loads. The values are based on normal conditions at 50 Hz and a calculated L10 bearing life of 40,000 hours.

Frame Size	Radial Load Horizontal Shaft	Axial Load Horizontal Shaft	Axial Load Shaft Down (down thrust)	Axial Load Shaft Down (up thrust)
80	47 kg	69 kg	65 kg	73 kg
90	49 kg	73 kg	66.5 kg	79.5 kg
100	72 kg	105 kg	95 kg	115 kg
112	95 kg	138 kg	124 kg	152 kg
132	147 kg	143 kg	123 kg	163 kg
160	179 kg	174 kg	134 kg	214 kg
180	248 kg	238 kg	182 kg	292 kg
200	297 kg	290 kg	210 kg	370 kg
225	305 kg	310 kg	230 kg	390 kg
250	1400 kg	325 kg	320 kg	510 kg
280	1500 kg	-	-	-
315M	1650 kg	-	-	-

Notes:
1. Based on 4 Pole motors, bearing life L-10 40,000 hours.
2. For radial load overhung point at centre of shaft extension.
3. For other loadings, please contact TECO.

Axial Radial Loadings - Foot

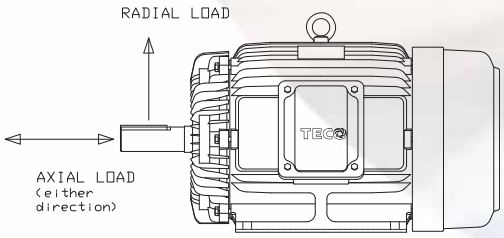

Axial Radial Loadings - Flange

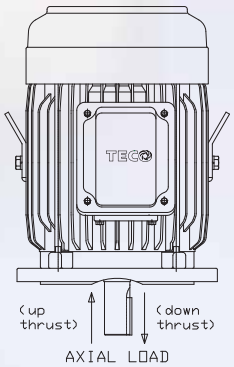

← RETURN TO INDEX

Cooling

Designation System Concerning Methods of Cooling Refers to Standard AS1359.106.

Standard Code Example

Code	Description	Type
IC 01	Self-cooling open machine.	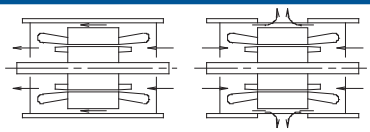
IC411	Enclosed machine. Smooth or finned ventilated casing. External shaft-mounted fan.	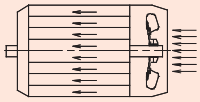
IC416	Enclosed machine. Smooth or finned ventilated casing. External motorized axial fan supplied with machine.	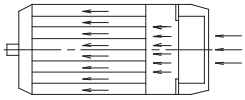

Example

Code		IC	4	(A)	1	(A)	6
International Cooling							
Circuit Arrangement	0 : Free circulation (open circuit) 4 : Frame surface cooled						
Primary Coolant	A : Air (omitted for simplified designation)						
Method of Movement of Primary Coolant	0 : Free convection 1 : Self-circulation 6 : Machine-mounted independent component						
Secondary Coolant	A : Air (omitted for simplified designation) W : Water						
Method of Movement of Secondary Coolant	0 : Free convection 1 : Self-circulation 6 : Machine-mounted independent component						

Cooling air flows from the non-drive-end to the drive end. When the motor is installed care should be taken not to impede the airflow into the motor fan cover. As a guide the following minimum dimension BL should be adopted.

Motor Frame	Dimensions BL (mm)
80 - 100	60
112 - 132	85
160 - 180	85
200 - 250	110
280	140
315 - 355	180

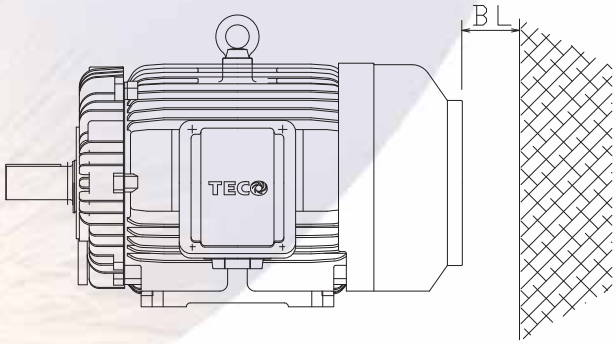

← RETURN TO INDEX

Force Cooling IC416

TECO can offer force cooling on most TEFC motors, listed below are common sizes with details (larger sizes please refer to TECO). All force cooling motors are 230 ~ 240 Volts Single Phase 50 Hz and are IP55 as standard. Fan motor leads are terminated in an auxiliary terminal box mounted on the fan cover.

Frame Size	Motor Watts	Amps	Force Cooling Unit length "Lfc" in mm
D80	17	0.1	95
D90	29	0.12	95
D100	29	0.12	90
D112	46	0.22	105
D132	46	0.22	85
D160	75	0.42	140
D180	75	0.42	135
D200	135	0.59	95

Notes: **1.** Dimensions subject to change.

Typical Force Cooling Unit.
View from the inside.

Force Cooling Lfc

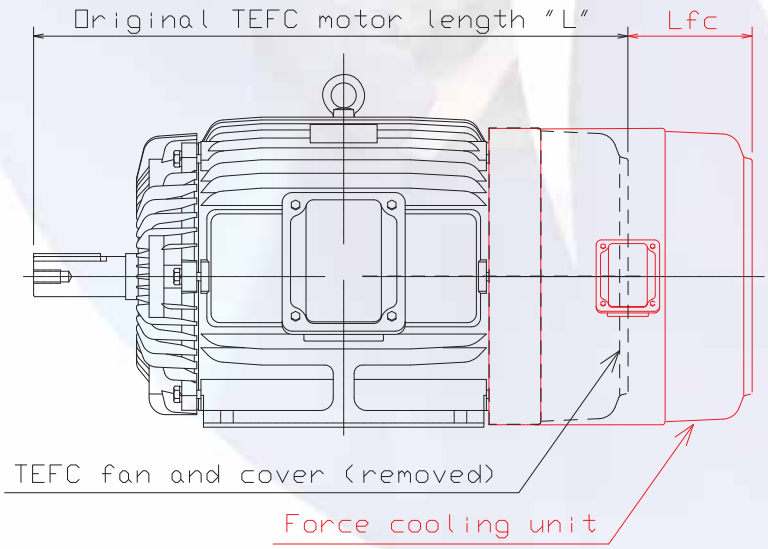

← RETURN TO INDEX

Mounting (IM code)

Mounting Arrangement (IM)

Foot Mounted		Flange Mounted		Foot / Flange Mounted	
IM 1001 (IM B3) Horizontal Shaft. Foot mounted.		**IM 3001 (IM B5)** Horizontal Shaft. 'D' type flange at D.E. No feet.	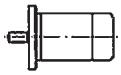	**IM 2001 (IM B35)** Horizontal Shaft. 'D' type flange at D.E. Foot mounted.	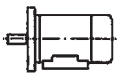
IM 1051 (IM B6) Horizontal Shaft. Foot wall mounted with feet on left-side when viewed from D.E.	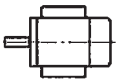	**IM 3011 (IM V1)** Vertical Shaft. 'D' type flange at D.E. Shaft down. No feet.	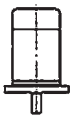	**IM 2011 (IM V15)** Vertical Shaft. 'D' type flange at D.E. Wall mounted. Shaft down.	
IM 1061 (IM B7) Horizontal Shaft. Foot wall mounted with feet on right-side when viewed from D.E.	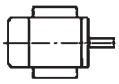	**IM 3031 (IM V3)** Vertical Shaft. 'D' type flange at D.E. Shaft up. No feet.		**IM 2031 (IM V36)** Vertical Shaft. 'D' type flange at D.E. Wall mounted. Shaft up.	
IM 1071 (IM B8) Horizontal Shaft. Ceiling mounted with feet above motor.		**IM 3601 (IM B14)** Horizontal Shaft. 'C' type flange at D.E. No feet.	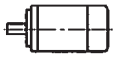	**IM 2101 (IM B34)** Horizontal Shaft. 'C' type flange at D.E. Foot mounted.	
IM 1011 (IM V5) Vertical Shaft. Wall mounted. Shaft down.		**IM 3611 (IM V18)** Vertical Shaft. 'C' type flange at D.E. Shaft down. No feet.		**IM 2111** Vertical Shaft. 'C' type flange at D.E. Wall mounted. Shaft down.	
IM 1031 (IM V6) Vertical Shaft. Wall mounted. Shaft up.	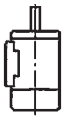	**IM 3631 (IM V19)** Vertical Shaft. 'C' type flange at D.E. Shaft up. No feet.		**IM 2131** Vertical Shaft. 'C' type flange at D.E. Wall mounted. Shaft up.	

It is important to nominate the "IM" code at enquiry and order stage to ensure that drain holes are in the correct position and bearing arrangement is checked for suitability if the "IM" code differs from standard.

Standard Mounting Arrangement

TECO Stock Motors - Standard Mounting Arrangement and Terminal Box Position				
Mounting	**IM Code**	**(IM Code)**	**Terminal box position (viewed from drive end)**	**Cable entry direction**
Foot	IM1001	IMB3	Right	From below
Flange	IM3011	IMV1	As needed (motor can be rotated)	From flange end
Foot & Flange	IM2001	IMB35	Right	From below

Mounting - Cast Iron Slide Rails - Dimensions

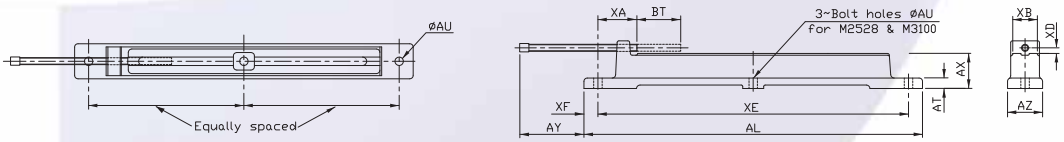

SLIDE RAIL	FRAME SIZE	AL	AT	AU	AX	AY	AZ	BT min.	XA max.	XB	XD	XE	XF
M0809	80	355	12	10	30	105	35	95	45	30	6	325	15
	90	355	12	10	30	105	35	80	45	30	6	325	15
M1013	100	470	16	12	44	170	52	160	50	43	6	430	18
	112	470	16	12	44	170	52	125	50	43	6	430	18
	132	470	16	12	44	170	52	100	50	43	6	430	18
M1618	160	615	19	15	64	170	76	155	67	57	11	565	25
	180	615	19	15	64	170	76	125	67	57	11	565	25
M2022	200	780	25	19	82	210	100	190	80	82	12	725	27
	225	780	25	19	82	210	100	140	80	82	12	725	27
M2528	250	965	30	24	100	275	100	250	86	82	16	885	40
	280	965	30	24	100	275	100	190	86	82	16	885	40
M3100	315	1215	40	38	125	380	123	330	110	95	20	1115	50

← RETURN TO INDEX

Protection (IP code)

Protection (IP)

First number: Protection against solid objects			Second number: Protection against liquids		
IP	Tests	Definition	IP	Tests	Definition
0		No protection.	0		No protection.
1		Protected against solid objects of over 50mm (e.g. accidental hand contact).	1		Protected against vertically dripping water (condensation).
2		Protected against solid objects of over 12mm (e.g. finger).	2	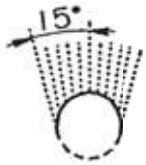	Protected against water dripping up to 15° from the vertical.
3		Protected against solid objects of over 2.5mm (e.g. tools, wire).	3	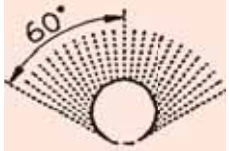	Protected against rain falling at up to 60° from the vertical.
4		Protected against solid objects of over 1mm (e.g. thin wire).	4	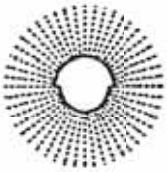	Protected against water splashes from all directions.
5		Protected against dust (e.g. no deposits of harmful material).	5	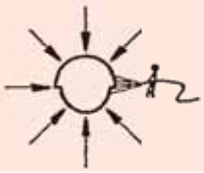	Protected against jets of water from all directions.
6		Totally protected against dust.	6	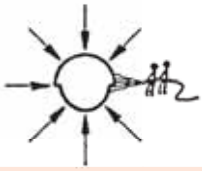	Protected against jets of water comparable to heavy seas.
			7	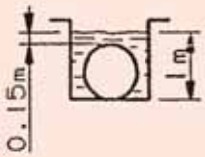	Protected against effects of immersion to depths of between 0.15 and 1m.
			8	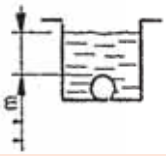	Protected against the effects of prolonged immersion at depth.

TECO

Electrical Design

Altitude and Ambient Temperature

Rated output power specified in the performance data tables apply for standard ambient conditions of 40°C up to 1000 m above se a level. Where temperature or altitude differ from the standard, multiplication factors in the table below should be used if motor temperature rise is to be maintained.

Ambient Temperature	Temperature Factor	Altitude above sea level	Altitude Factor
30°C	1.06	1000 m	1
35°C	1.03	1500 m	0.97
40°C	1	2000 m	0.945
45°C	0.97	2500 m	0.92
50°C	0.93	3000 m	0.89
55°C	0.9	3500 m	0.865
60°C	0.865	4000 m	0.835

Notes:
1. Effective Power = (Rated Power) x (Temperature Factor) x (Altitude Factor)
2. The low temperature rise of TECO motors in many instances preclude the need for derating, please refer to TECO.

Earth Topography

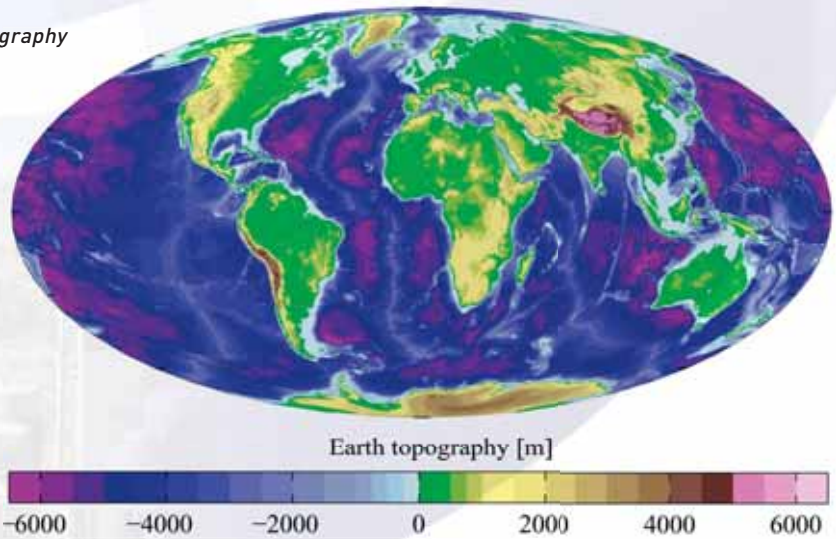

← RETURN TO INDEX

Anti-Condensation Heaters (Optional)

Anti-condensation heaters are used to prevent the water accumulation caused by moisture condensation inside the motor. These are flexible type elements and tied on the ends of the winding to maintain the average temperature of the motor above dew point. The heaters must be switched on when the machine stops and switched off whilst the machine is in operation. A prominent warning label is fitted with the appropriate rating of the heaters nominated.

The space heater leads are normally terminated to an auxiliary terminal box for safety reasons.

The normal supply of space heaters is single phase 240V, other voltages can be supplied on request.

Power Rating of Anti-Condensation Heaters

Heater length varies to suit diameter of end-winding.

Frame Size	Power in Watts
80 ~ 100	25
112	21
132 ~ 160	40
180 ~ 200	26
225 ~ 250	42
280	54
315M	99
315A	200
355	250

Connection Diagrams

TECO motors are connected as shown on the motor nameplate, typical Star or Delta connection diagram is shown below.

TECO stock motors 4 kW and below are 380 ~ 415 Volt 50 Hz STAR connected and may also be reconnected to 240 Volt 3-Phase 50 Hz DELTA configuration for use with single phase input inverters.

Motors 5.5 kW and larger are 380 ~ 415 Volt 50 Hz DELTA connected.

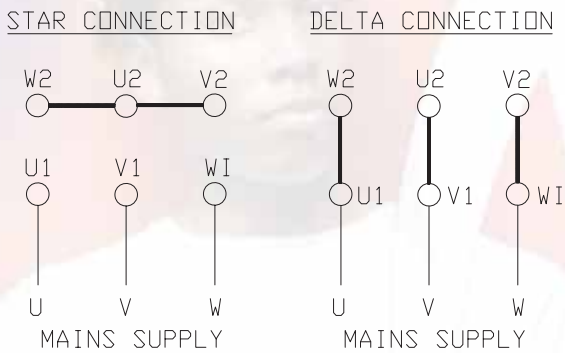

Duty

TECO motors are supplied suitable for S1 operation (continuous operation under rated load). When the motor is to operate under any other type of duty the following information should be supplied to determine the correct motor size.

- Type and frequency of switching (short time, intermittent, periodic, high inertia, braking).
- Load torque variation during motor acceleration and braking (in graphical form).
- Moment of inertia of the load on the motor shaft.
- Type of braking (e.g. mechanical, electrical through phase reversal or DC injection.)
- For duty cycles other than S1 please refer to TECO.

← RETURN TO INDEX

Formulae and Conversions

Electric Motor characteristics

Output Power

$$P\ (kW) = \frac{M \times n}{9550}$$

Output Power

$$P_{mec} = \frac{\sqrt{3} \times U \times I \times \cos \quad \times \eta}{1000}$$

Output Torque

$$M = \frac{9550 \times P}{n}$$

Star Delta Starting

$$\text{Torque (Star)} = \frac{\text{Full Load Torque (Delta)}}{0.333}$$

$$\text{Current (Star)} = \frac{\text{Full Load Current (Delta)}}{0.577}$$

3-Phase Input Power

$$P_{el} = \frac{\sqrt{3} \times U \times I \times \cos}{1000}$$

Efficiency

$$\eta = \frac{\text{Output kW}}{\text{Input kW}}$$

$$\eta = \frac{P_{mec} \times 1000}{\sqrt{3} \times U \times I \times \cos}$$

Motor Current

$$I = \frac{P_{mec} \times 1000}{\sqrt{3} \times U \times \cos \quad \times \eta}$$

$$I = \frac{P_{elec} \times 1000}{\sqrt{3} \times U \times \cos}$$

I - Motor current, can be calculated for full or partial loadings.
Use Efficiency and Power Factor relative to motor loadings.

Motor Speed

$$n = \frac{120 \times f}{\text{Poles}}$$

Hz	Number of Poles - Synchronous Speed					
	2	4	6	8	10	12
50	3000	1500	1000	750	600	500
60	3600	1800	1200	900	720	600

Key:
P = Power in kW
Subscript
P_{el} = electrical
P_{mec} = mechanical

m = Torque in Nm
n = Rotational speed in r/min
U = Line voltage in V
I = Line current in A
cos = Power factor (per unit)
η = Motor efficiency (per unit)
f = Frequency in Hz
J = WR^2 = WK^2

Conversions

Length

	m	cm	mm
1 m =	1	100	1000
1 mm =	0.001	0.1	1
1 ft =	0.3048	30.48	304.8
1 in =	0.254	2.54	25.4

m = meter, cm - centimeter, mm = millimeter

Force and weight

	N	kp	p
1 N =	1	0.102	102
1 kp =	9.807	1	1000
1 lbf =	4.448	0.4536	453.6
1 in =	0.254	2.54	25.4

Velocity

	km/h	m/min	m/s
1 km/h =	1	16.667	0.2778
1 m/min =	0.06	1	16.7×10^{-3}
1m/s =	3.6	60	1
1 in =	0.254	2.54	25.4

Torque

	Nm	kgfm
1 Nm =	1	0.10197
1 kgfm =	9.8067	1
1 lbf.ft =	1.356	0.1383
1 lbf.in =	0.1129	11.5×10^{-3}

Power

	kW	hp
1 kW =	1	1.341
1 hp =	0.7457	1

Moment of inertia

	kgm^2 (J)	$kgfm^2(GD^2)$
1 kgm^2 (J) =	1	4
1 $kgfm^2(GD^2)$ =	0.25	1

← RETURN TO INDEX

Insulation Classes

The graph below indicates the limits of winding temperature and temperature rise for the various insulation classes in accordance with AS60034-1 Items 1b) & 1d) AC motors.

The difference between the temperature rise and the insulation class rating equates to the safety margin available.

The majority of TECO motors comply with a limitation of Class E temperature rise (75°C) or less thereby providing a minimum of an additional 5°C that can be added to the safety margin, which provides the client with a motor that will perform extremely well in arduous temperature applications whether this be load or ambient induced.

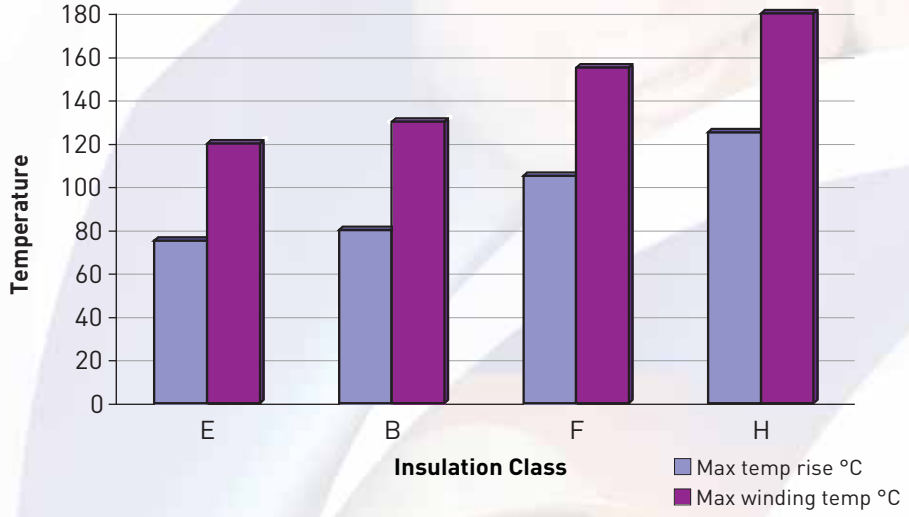

Speed vs. Torque - Current

The graph below indicates the typical speed vs. torque current characteristics of a D132 frame motor to "Design N" Normal Torque. The motor is started DOL and the major points on these curves are defined below.

Speed vs. Torque - Current Curves

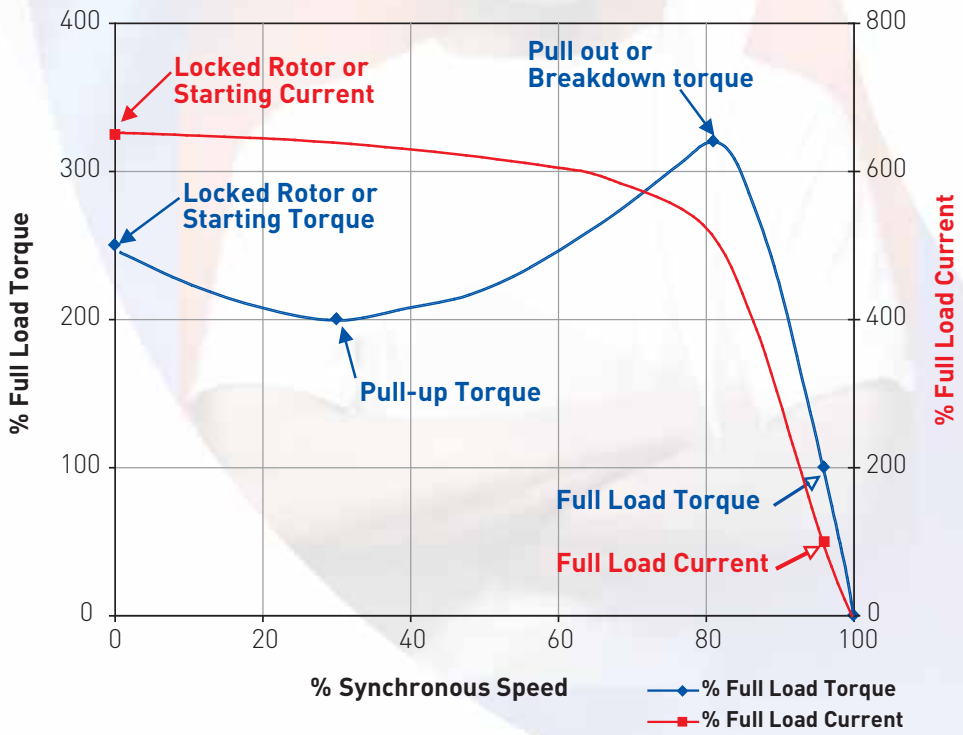

← RETURN TO INDEX

Starts Per Hour

Starts Per Hour and Maximum Load Inertia

Maximum starts per hour DOL based on maximum load inertia listed, these are quoted as equally spaced and includes one cold start.

For larger inertias and / or greater frequency of starting please refer to TECO.

Starts Per Hour (Based on Maximum Load Inertia)

Pole	Frame Size					
	80 - 112	132 - 160	180 - 200	225 - 250	280	315M
2	12	10	8	5	3	3
4	22	20	16	10	6	4
6	28	25	20	12	8	6

Maximum Allowable Load Inertia

kW	Load Inertia							
	GD^2 Kg-m²	WR^2 Kg-m²	GD^2 Kg-m²	WR^2 Kg-m²	GD^2 Kg-m²	WR^2 Kg-m²	GD^2 Kg-m²	WR^2 Kg-m²
	2 Pole		4 Pole		6 Pole		8 Pole	
0.75	0.325	0.081	1.41	0.353	3.65	0.913	7.54	1.89
1.1	0.440	0.110	2.09	0.523	5.60	1.40	11.0	2.74
1.5	0.580	0.145	2.68	0.670	7.30	1.83	14.6	3.65
2.2	0.850	0.213	4.14	1.04	10.7	2.68	21.2	5.29
3	1.12	0.280	5.35	1.34	14.0	3.50	27.9	6.97
4	1.53	0.383	7.23	1.81	19.0	4.75	38.0	9.51
5.5	2.02	0.505	9.49	2.37	25.3	6.33	50.6	12.7
7.5	2.68	0.670	12.4	3.10	33.3	8.34	66.4	16.6
11	3.89	0.973	18.3	4.57	48.7	12.2	97.3	24.3
15	5.11	1.28	24.1	6.02	63.8	15.9	127	31.8
18.5	6.20	1.55	29.7	7.42	78.8	19.7	157	39.2
22	7.54	1.89	35.1	8.76	93.5	23.4	187	46.8
30	9.73	2.43	46.0	11.5	122	30.5	245	61.2
37	11.9	2.98	56.5	14.1	151	37.8	302	75.5
45	14.1	3.53	66.9	16.7	179	44.8	358	89.5
55	17.3	4.32	82.2	20.6	220	55.0	441	110
75	22.4	5.60	107	26.8	187	46.8	577	144
90	27.5	6.88	132	33.0	353	88.2	710	178
110	32.3	8.08	156	39.0	418	105	*	*
132	36.5	9.13	176	44.0	481	120	*	*
150	41.8	10.5	202	50.5	*	*	*	*
185	51.1	12.8	247	61.8	*	*	*	*

Notes: * For larger sizes please refer to TECO.

← RETURN TO INDEX

Thermal Protection

The various types of thermal protection devices are described as below. Whilst these devices provide excellent thermal protection they may not fully protect against some transient conditions.

Additional set(s) of these protection devices can be provided with a lower temperature rating which can be utilized as an alarm function. Higher temperature ratings can be supplied for higher trip temperatures, however care should be taken to ensure the temperature rating of the insulation class is not compromised.

Thermistors

Thermistors, thermo-variable resistors and have a positive temperature co-efficient (PTC). Three thermistors are fitted to the end-windings (one per phase), which are connected in series. The standard TECO thermistors have a trip temperature of 150°C @ 1000 ohms (3000 ohms total, 3 thermistors, one per phase).

Thermistors are sensors that require connection to a control relay (this relay is not supplied by TECO).

The leads normally are terminated in the main terminal box with an auxiliary terminal box available if specified.

Temperature vs. Resistance Diagram

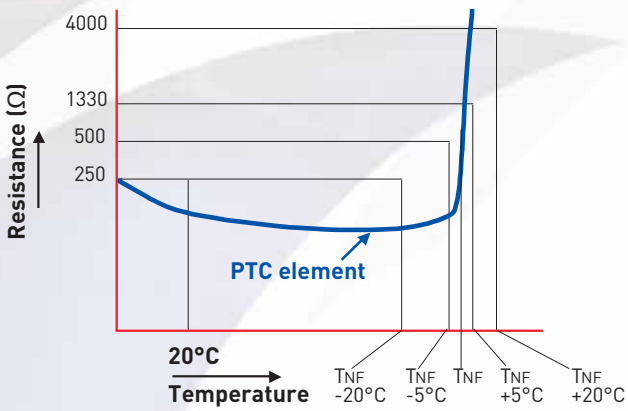

Connection Lead Colour Coding

Trip Temperature (°C)	Lead Wire Colours	
90	GREEN	GREEN
100	RED	RED
110	BROWN	BROWN
120	GREY	GREY
130	BLUE	BLUE
140	WHITE	BLUE
150	BLACK	BLACK
160	BLUE	RED

Thermistors and / or RTD's should not be Meggered or tested at a voltage above 2.5 volts.

Typical Thermistor Nameplates

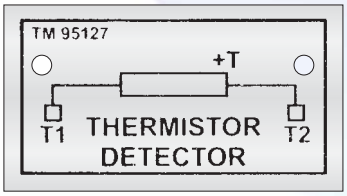

← RETURN TO INDEX

Resistance Temperature Detectors (RTDs)

An RTD, Resistance Temperature Detector, is a device that provides a change in resistance value in relationship to temperature.

This change is of a linear nature thereby providing the ability to accurately monitor the motor operating temperatures when connected to an appropriate relay.

The most commonly used RTD is the platinum type which has a nominal resistance of 100ohms @ 0°C (PT100) and is of the 3 wire type (other RTD types available on application).

When fitted the RTD leads are terminated to an auxiliary terminal box (it is recommended that external wiring to this box be of the screened copper conductor type to prevent any electromagnetic interference).

"3 wire" RTD circuit

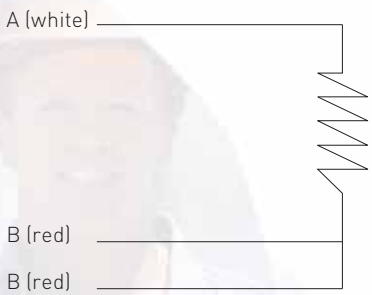

- Winding RTDs can be provided within the windings, one per phase or more as required.
- Bearing RTDs can be provided if required. The RTD element is located in a stainless steel metal probe and is mounted within a bearing thermowell.

Table for Platinum Resistance Elements (Resistance in Ohms vs. Temperature) e.g. 19°C = 107.40 Ohms

°C	0	1	2	3	4	5	6	7	8	9
0	100.00	100.39	100.78	101.17	101.56	101.95	102.34	102.73	103.12	103.51
10	103.90	104.29	104.68	105.07	105.46	105.85	106.24	106.63	107.02	107.40
20	107.79	108.18	108.57	108.96	109.35	109.73	110.12	110.51	110.90	111.28
30	111.67	112.06	112.45	112.83	113.22	113.61	113.99	114.38	114.77	115.15
40	115.54	115.93	116.31	116.70	117.08	117.47	117.85	118.24	118.62	119.01
50	119.40	119.78	120.16	120.55	120.93	121.32	121.70	122.09	122.47	122.86
60	123.24	123.62	124.01	124.39	124.77	125.16	125.54	125.92	126.31	126.69
70	127.07	127.45	127.84	128.22	128.60	128.98	129.37	129.75	130.13	130.51
80	130.89	131.27	131.66	132.04	132.42	132.80	133.18	133.56	133.94	134.32
90	134.70	135.08	135.46	135.84	136.22	136.60	136.98	137.36	137.74	138.12
100	138.50	138.88	139.26	139.64	140.02	140.39	140.77	141.15	141.53	141.91
110	142.29	142.66	143.04	143.42	143.80	144.17	144.55	144.93	145.31	145.68
120	146.06	146.44	146.81	147.19	147.57	147.94	148.32	148.70	149.07	149.45
130	149.82	150.20	150.57	150.95	151.33	151.70	152.08	152.45	152.83	153.20
140	153.58	153.95	154.32	154.70	155.07	155.45	155.82	156.19	156.57	156.94
150	157.31	157.69	158.06	158.43	158.81	159.18	159.55	159.93	160.30	160.67
160	161.04	161.42	161.79	162.16	162.53	162.90	163.27	163.65	164.02	164.39
170	164.76	165.13	165.50	165.87	166.24	166.61	166.98	167.35	167.72	168.09
180	168.46	168.83	169.20	169.57	169.94	170.31	170.68	171.05	171.42	171.19
190	172.16	172.53	172.90	173.26	173.63	174.00	174.37	174.74	175.10	175.47
200	175.84	176.21	176.57	176.94	177.31	177.68	178.04	178.41	178.78	179.14

Recommend Temperature Settings for RTDs

Device	Type	Location	Alarm	Trip
RTD	Platinium 100 Ohms @ 0°C	Winding	140°C	150°C
RTD	Platinium 100 Ohms @ 0°C	DE & NDE Bearing	95°C	100°C

← RETURN TO INDEX

Tolerances for Electromechanical Characteristics

AS60034-1 Specifies Standard Tolerances for Electromechanical Characteristics (Squirrel Cage Induction Motors)

Quantity	Tolerance
Efficiency P ≦ 150 kW	-15% (1-η)
Efficiency P > 150 kW	-10% (1-η)
Power factor (Cosφ)	-1/6 (1-cosφ) min. 0.02, max. 0.07
Slip P < 1 kW	±30% of the slip
Slip P ≧ 1 kW	±20% of the slip
Starting torque	-15%, +25% of the torque
Starting current	+20% of the current
Pull-up torque	-15% of the torque
Break down torque	-10% of the torque >1.5 full load torque

AS1359.10 Dimensional Tolerances

Shaft Height
Dimension "H"

Frame Size	Tolerance	Tolerance (mm)
63 to 250		+ 0
		- 0.5
280 to 450		+ 0
		- 1

Shaft
Dimension "D".

D	Tolerance	Tolerance (mm)
14	j6	+ 0.008
		- 0.003
19 to 28	j6	+ 0.009
		- 0.004
32 to 48	k6	+ 0.018
		+ 0.002
55 to 80	m6	+ 0.030
		+ 0.011
85 to 120	m6	+ 0.035
		+ 0.013
125	m6	+ 0.040
		+ 0.015

Flange
Dimension "N"

N	Tolerance	Tolerance (mm)
110	h7	+ 0
		- 0.035
130 & 180	h7	+ 0
		- 0.040
230 & 250	h7	+ 0
		- 0.046
300	h7	+ 0
		- 0.052
350	h7	+ 0
		- 0.057
450	h7	+ 0
		- 0.063
550	h7	+ 0
		- 0.070

C Face
Dimension "N"

N	Tolerance	Tolerance (mm)
60 to 80	h7	+ 0
		- 0.030
95 & 110	h7	+ 0
		- 0.035
130	h7	+ 0
		- 0.040

← RETURN TO INDEX

Variable Speed Drives (VVVF)

The output of Variable Voltage Variable Frequency (VVVF) Drives is not purely sinusoidal. This causes higher voltage stresses within the windings and increases the losses, vibration, and noise of the motor. The Loadability Curve and Maximum Safe Speed are as below, this graph should be used as a guide only. Further consultation with TECO may be required for arduous critical speed and load duties.

Typical Motor Loadability Curve

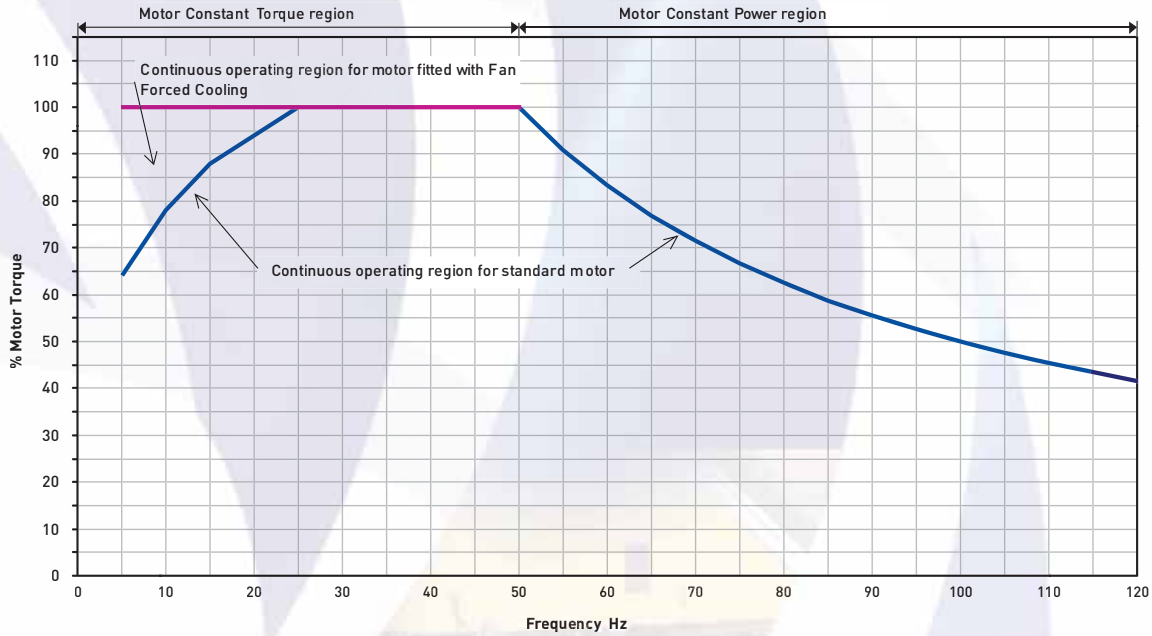

Notes:
1. Installation: to follow the guidelines detailed in "AS60034-17:2006 Cage induction motors when fed from converters - Application guide"
2. Maximum safe operating speed to follow AS60034-1,Table 17

For variable torque loads (centrifugal pumps and fans) for speeds between 5-50 Hz derating is not normally required. Outside of this range please check with TECO for motor suitability.

Typical variable and constant torque load curves are shown below.

Speed vs. Torque Curves (assuming load torque @ 100% speed = motor full load torque)

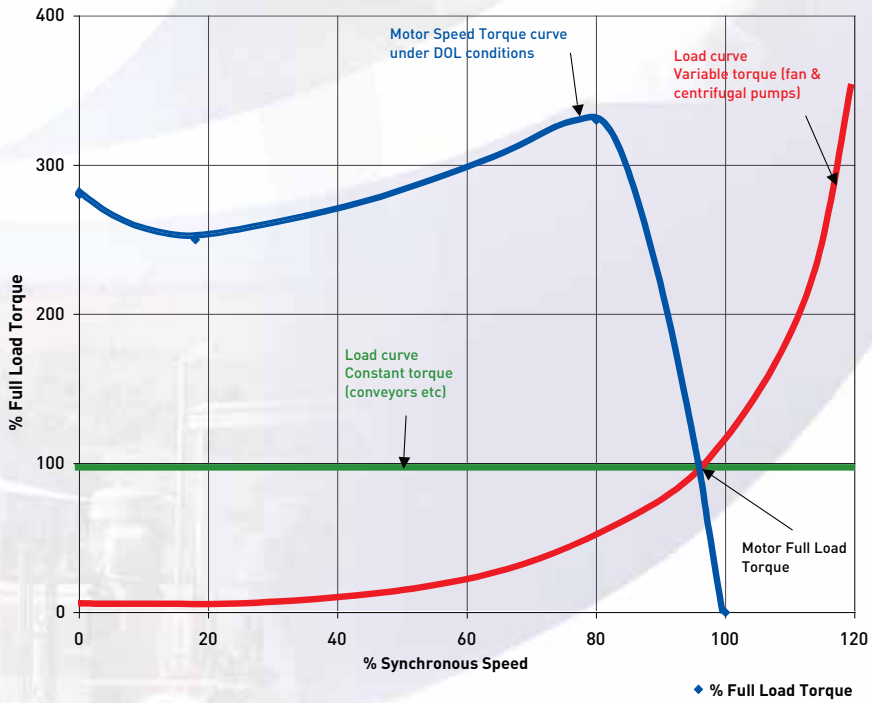

← RETURN TO INDEX

Variable Speed Drives (VVVF) continued

Maximum Safe Operating Speeds (AS60034-1 Table 17)

Frame Number	2 Pole	4 Pole	6 Pole
≤ 112	5200	3600	2400
132 ~ 180	4500	2700	2400
200	4500	2300	1800
225 ~ 315	3600	2300	1800

Note: Motors are balanced to 60 Hz speed. If motor operation is above 60 Hz special balance may be required (please refer to TECO).

Motor Synchronous Speed vs. Frequency

Motor Synchronous Speed vs. Frequency																									
Frequency (Hz)	0	5	10	15	20	25	30	35	40	45	50	55	60	65	70	75	80	85	90	95	100	105	110	115	120
2 Pole RPM	0	300	600	900	1200	1500	1800	2100	2400	2700	3000	3300	3600	3900	4200	4500	4800	5100	5400	5700	6000	6300	6600	6900	7200
4 Pole RPM	0	150	300	450	600	750	900	1050	1200	1350	1500	1650	1800	1950	2100	2250	2400	2550	2700	2850	3000	3150	3300	3450	3600
6 Pole RPM	0	100	200	300	400	500	600	700	800	900	1000	1100	1200	1300	1400	1500	1600	1700	1800	1900	2000	2100	2200	2300	2400
8 Pole RPM	0	75	150	225	300	375	450	525	600	675	750	825	900	975	1050	1125	1200	1275	1350	1425	1500	1575	1650	1725	1800

Cage Induction Motors when Fed from Variable Speed Drives

TECO motors follow the guidelines laid down in AS60034-17: "Cage Induction motors when fed from converters - Application guide".

Certain applications, installations and site condition may cause some damage to motors if they are not correctly installed. AS60034-17 has details on installation of Cage Motors and Variable Speed Drives.

Supply Systems ≤ 500 Volts

On TEFC motors frame size D280 and larger TECO can offer the option of a rotor groundary brush at the drive end in order to aid in reducing the effects of Electro Discharge Machining (EDM) on motor bearings, which can be prevalent in some cases.

On larger motors, frame size D315 and above, we recommend the additional option on an insulated bearing at the non drive end to eliminate shaft current and also assist in reduction of EDM through the motor bearings.

Both of these options can also be offered on smaller motors.

TECO Australia stock series of LV (≦500V) motors meets or exceeds conditions in TS 60034, Part 17 (Cage induction motors when fed from converters - Application guide), TS 60034, Part 25 (Guide for the design and performance of cage induction motors specially designed for converter supply) and NEMA MG1 part 30, part 31.

TECO Australia stock MAX-E2 random woundmotors are capable of withstanding - Class F : ≦1,860 Vpeak, tr ≧0.1μs

Supply systems in excess of 500 Volts and Open Drip motors frame size C280 and larger may require special consideration, please refer to TECO.

"Rotor Groundary Brush" fitted to D315 frame motor

Typical "VSD Ready" Large Frame Size Motor

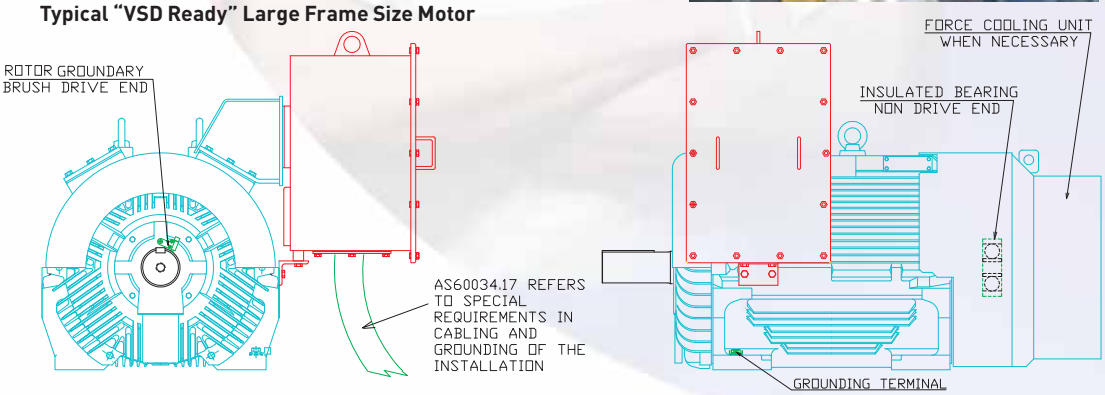

← RETURN TO INDEX

Voltage and Frequency Variations during Operation - AS60034-1

For a.c. motors rated for use on a power supply of fixed frequency supplied from an a.c. generator (whether local or via a supply network), combinations of voltage variation and frequency variation are classified as being either Zone A or Zone B , in accordance with the figure right.

A machine shall be capable of performing its primary function continuously within zone A, but need not comply fully with its performance at rated voltage and frequency and may exhibit some deviations. Temperature rises may be higher than at rated voltage and frequency.

A machine shall be capable of performing its primary function within zone B, but may exhibit greater deviations from its performance at rated Voltage and frequency than in zone A. Temperature rises may be higher than at rated voltage and frequency and most likely will be higher than those in zone A.

Voltage and Frequency Limits for Motors

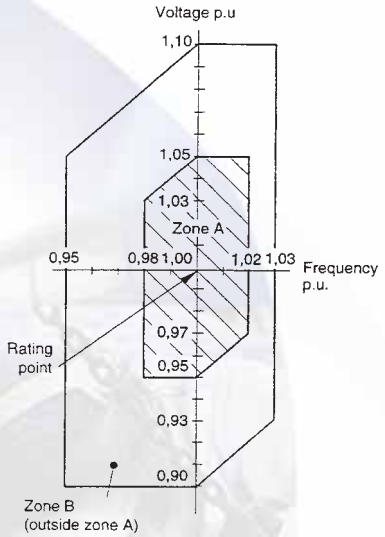

Voltage Variation, Effect on Performance

The characteristics of motors will of course vary with a corresponding variation in voltage of ± 10% around the nominal value.

An approximation of these variations is given in the table below.

	Voltage Variation in %				
	U_N-10%	U_N-5%	U_N-	U_N+5%	U_N+10%
Torque curve	0.81	0.9	1	1.1	1.21
Slip	1.23	1.11	1	0.91	0.83
Rated current	1.1	1.05	1	0.98	0.98
Rated efficiency	0.97	0.98	1	1	0.98
Rated power factor (cosφ)	1.03	1.02	1	0.97	0.94
Starting current	0.9	0.95	1	1.05	1.1
Nominal temperature rise	1.18	1.05	1	1.00	1.1
P (Watt) no-load	0.85	0.92	1	1.12	1.25
Q (reactive V A) no-load	0.81	0.9	1	1.1	1.21

Other Mains Supply

The TECO Australia 380~415 Volt 3-Phase 50 Hz stock motors up to frame size D315M are also suitable for re-nameplating to 440 Volt 50 Hz or 400~480 Volt 60 Hz without the need for derating. Performance details are available on request.

Some world supply systems are given below. Site supply details should be checked to confirm.

World 3-Phase Voltage-Frequency

Country	Voltage	Frequency	Country	Voltage	Frequency	Country	Voltage	Frequency
Taiwan	380	60	Japan	200	50/60	* England	415*	50
Singapore	400	50	Philippines	460	60	* Germany	380*	50
Malaysia	415	50	India	400	50	Italy	380*	50
Indonesia	380	50	Korea	380	60	Spain	380*	50
Thailand	380	50	Vietnam	380	50	Netherlands	380*	50
China	380	50	USA	460	60	Australia	415	50
Hong Kong	346	50	Canada	460 or 565	60	South Africa	380	50
						Saudi Arabia	380	50

Note: * EU are harmonising voltage to 400 Volt 50 Hz